Dual Stage Rotary Vane Pumps

DS102 1Ph, DS202 1Ph, DS302 1Ph, DS402 1Ph, DS402 3Ph, DS602 1Ph, DS602 3Ph

Models
9499315, 9499320, 9499325, 9499330, 9499331, 9499335, 9499336

Manuale di istruzioni
Bedienungshandbuch
Notice de mode d'emploi
User Manual

87-900-937-01 (R)
11/2018

Agilent Technologies

Notices

© Agilent Technologies, Inc. 2018

No part of this manual may be reproduced in any form or by any means (including electronic storage and retrieval or translation into a foreign language) without prior agreement and written consent from Agilent Technologies, Inc. as governed by United States and international copyright laws.

Manual Part Number

Publication Number: 87-900-937-01 (R)

Edition

Edition 11/2018

Printed in ITALY

Agilent Technologies Italia S.p.A.

Vacuum Products Division

Via F.lli Varian, 54

10040 Leini (TO)

ITALY

Warranty

The material contained in this document is provided "as is," and is subject to being changed, without notice, in future editions. Further, to the maximum extent permitted by applicable law, Agilent disclaims all warranties, either express or implied, with regard to this manual and any information contained herein, including but not limited to the implied warranties of merchantability and fitness for a particular purpose. Agilent shall not be liable for errors or for incidental or consequential damages in connection with the furnishing, use, or performance of this document or of any information contained herein. Should Agilent and the user have a separate written agreement with warranty terms covering the material in this document that conflict with these terms, the warranty terms in the separate agreement shall control.

Technology Licenses

The hardware and/or software described in this document are furnished under a license and may be used or copied only in accordance with the terms of such license.

Restricted Rights Legend

If software is for use in the performance of a U.S. Government prime contract or subcontract, Software is delivered and licensed as "Commercial computer software" as defined in DFAR 252.227-7014 (June 1995), or as a "commercial item" as defined in FAR 2.101(a) or as "Restricted computer software" as defined in FAR 52.227-19 (June 1987) or any equivalent agency regulation or contract clause. Use, duplication or disclosure of Software is subject to Agilent Technologies' standard commercial license terms, and non-DOD Departments and Agencies of the U.S. Government will receive no greater than Restricted Rights as defined in FAR 52.227-19(c)(1-2) (June 1987). U.S. Government users will receive no greater than Limited Rights as defined in FAR 52.227-14 (June 1987) or DFAR 252.227-7015 (b)(2) (November 1995), as applicable in any technical data.

Trademarks

Windows and MS Windows are U.S. registered trademarks of Microsoft Corporation.

Safety Notices

CAUTION

A **CAUTION** notice denotes a hazard. It calls attention to an operating procedure, practice, or the like that, if not correctly performed or adhered to, could result in damage to the product or loss of important data. Do not proceed beyond a **CAUTION** notice until the indicated conditions are fully understood and met.

WARNING

A WARNING notice denotes a hazard. It calls attention to an operating procedure, practice, or the like that, if not correctly performed or adhered to, could result in personal injury or death. Do not proceed beyond a WARNING notice until the indicated conditions are fully understood and met.

DS102 – DS202 – DS302 – DS402 – DS602

Contents

1 Istruzioni per l'uso 9

Informazioni generali 10

Immagazzinamento 13

Preparazione per l'installazione 14

Installazione 15

Uso 20

Manutenzione 21

Smaltimento 23

2 Gebrauchsanleitung 25

Allgemeine Hinweise 26

Lagerung 29

Vor der Installation 30

Installation 31

Gebrauch 37

Wartung 38

Entsorgung 40

3 Mode d'emploi 41

Indications Generales 42

Emmagasinage 45

Préparation pour l'installation 46

Installation 47

Utilisation 53

Maintenance 54

Mise au rebut 56

4 Instructions for Use 57

General Information 58

Storage 61

Preparation for Installation 62

Installation 63

Use 68

Maintenance 69

Disposal 71

5 Technical Description 73

SECTION I 75

Technical Description 75

Lubrication 77

Vacuum Seals 77

Gas Ballast Valve 77

Anti-Suckback Device 78

Technical Data 84

Dimensions 87

Safety Precautions 89

Transport and Installation 89

Preliminary Operations 91

SECTION II 92

Electrical motors 92

Three Phase Universal Motors 96

Connections to the Inlet and Exhaust Flanges 98

Starting and Running the Pump 99

Stopping the Pump 101

Safety Rules101

Warning Notes 102

Caution notes 104

Maintenance Actions 105

Lubricants 107

Scheduled Maintenance Cards 112

Troubleshooting and Corrective Action 156

Replacement Parts and Accessories 160

1
Istruzioni per l'uso

Informazioni generali 10
Simboli usati 12
Immagazzinamento 13
Preparazione per l'installazione 14
Installazione 15
Uso 20
Manutenzione 21
Smaltimento 23

Traduzione delle istruzioni originali

Informazioni generali

Questa apparecchiatura è destinata ad uso professionale. L'utilizzatore deve leggere attentamente il presente manuale di istruzioni ed ogni altra informazione addizionale fornita dalla Agilent prima dell'utilizzo dell'apparecchiatura. La Agilent si ritiene sollevata da eventuali responsabilità dovute all'inosservanza totale o parziale delle istruzioni, ad uso improprio da parte di personale non addestrato, ad interventi non autorizzati o ad uso contrario alle normative nazionali specifiche.

Le pompe DS102 1Ph, DS202 1Ph, DS302 1Ph, DS402 1Ph, DS402 3Ph, DS602 1Ph e DS602 3Ph sono delle pompe rotative bistadio a palette, a tenuta in bagno d'olio, azionate da motore elettrico mono o trifase.

Queste pompe da alto vuoto sono adatte al pompaggio di gas non corrosivi.

Nei paragrafi seguenti sono riportate tutte le informazioni necessarie a garantire la sicurezza dell'operatore durante l'utilizzo dell'apparecchiatura. Informazioni dettagliate sono fornite nell'appendice “Technical Information”.

Questo manuale utilizza le seguenti convenzioni:

AVVERTENZA!

I messaggi di avvertenza attirano l'attenzione dell'operatore su una procedura o una pratica specifica che, se non eseguita in modo corretto, potrebbe provocare gravi lesioni personali.

ATTENZIONE!

I messaggi di attenzione sono visualizzati prima di procedure che, se non osservate, potrebbero causare danni all'apparecchiatura.

NOTA

Le note contengono informazioni importanti estrapolate dal testo.

Simboli usati

I seguenti simboli sono utilizzati in modo coerente in tutte le illustrazioni:

Simboli	Descrizione
	Flangia d'aspirazione
	Flangia di scarico
	Riempimento con liquido d'esercizio
	Zavorratore
	Superficie calda "Pericolo di scottature se vengono toccate le parti calde"
	Pericolo "Vedere istruzioni di installazione/Modi d'uso"
	Pericolo, rischio di scossa elettrica

Immagazzinamento

Durante il trasporto e l'immagazzinamento delle pompe non devono essere superate le seguenti condizioni ambientali:

- temperatura: da -20 °C a +70 °C
- umidità relativa: 0 – 95 % (non condensante)

Preparazione per l'installazione

La pompa viene fornita in un imballo protettivo speciale; se si presentano segni di danni, che potrebbero essersi verificati durante il trasporto, contattare l'ufficio vendite locale.

Il peso dell'imballo, comprensivo della pompa, è, al massimo, di circa 32 [Kg].

Durante l'operazione di disimballaggio, prestare particolare attenzione a non lasciar cadere la pompa e a non sottoporla ad urti o vibrazioni.

Non disperdere l'imballo nell'ambiente. Il materiale è completamente riciclabile e risponde alla direttiva CEE 85/399 per la tutela dell'ambiente.

NOTA La pompa non può essere danneggiata rimanendo semplicemente esposta all'atmosfera. Si consiglia comunque di mantenerla chiusa fino al momento dell'installazione sul sistema onde evitare eventuale inquinamento da polvere.

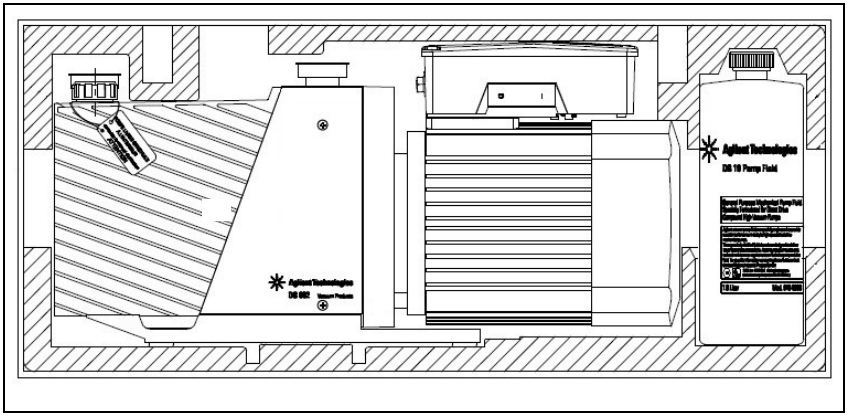

Figura 1

Installazione

Non installare e/o utilizzare la pompa in ambienti esposti ad agenti atmosferici (pioggia, gelo, neve), polveri, gas aggressivi, in ambienti esplosivi o con elevato rischio di incendio.

Durante il funzionamento è necessario che siano rispettate le seguenti condizioni ambientali:

- temperatura: da +12 °C a +40 °C
- umidità relativa: 0 – 95 % (non condensante).

AVVERTENZA! **Per proteggere contro corto-circuiti o sovraccarichi, si deve installare un interruttore automatico di Tipo C sulla linea d'alimentazione principale verso i dispositivi Agilent, di capacità adeguata (vedere la tabella seguente):**

P/N	110 Vac	220 Vac	380 Vac
9499315	10 A	6 A	
9499320	10 A	6 A	
9499325	10 A	6 A	
9499330	16 A	7.5 A	
9499331		6 A	6 A
9499335	16 A	7.5 A	
9499336		6 A	4 A

AVVERTENZA! **La pompa deve essere installata in modo tale da permettere una facile interruzione della linea d'alimentazione elettrica.**

Cavo d'alimentazione per pompe monofase: Il giusto cavo per il collegamento elettrico è un cavo a tre fili (Fase+Neutro+Terra). La sezione del cavo deve essere di almeno 0,75 mm^2 (AWG18).

ATTENZIONE! Prima di avviare la pompa, occorre procedere al rifornimento di olio lubrificante, poichè la pompa viene fornita scarica.

AVVERTENZA!

Togliere il tappo di protezione posto sulla flangia di aspirazione. Togliere la capsula metallica e la membrana dalla flangia di scarico seguendo la procedura rappresentata dalla sequenza fotografica.

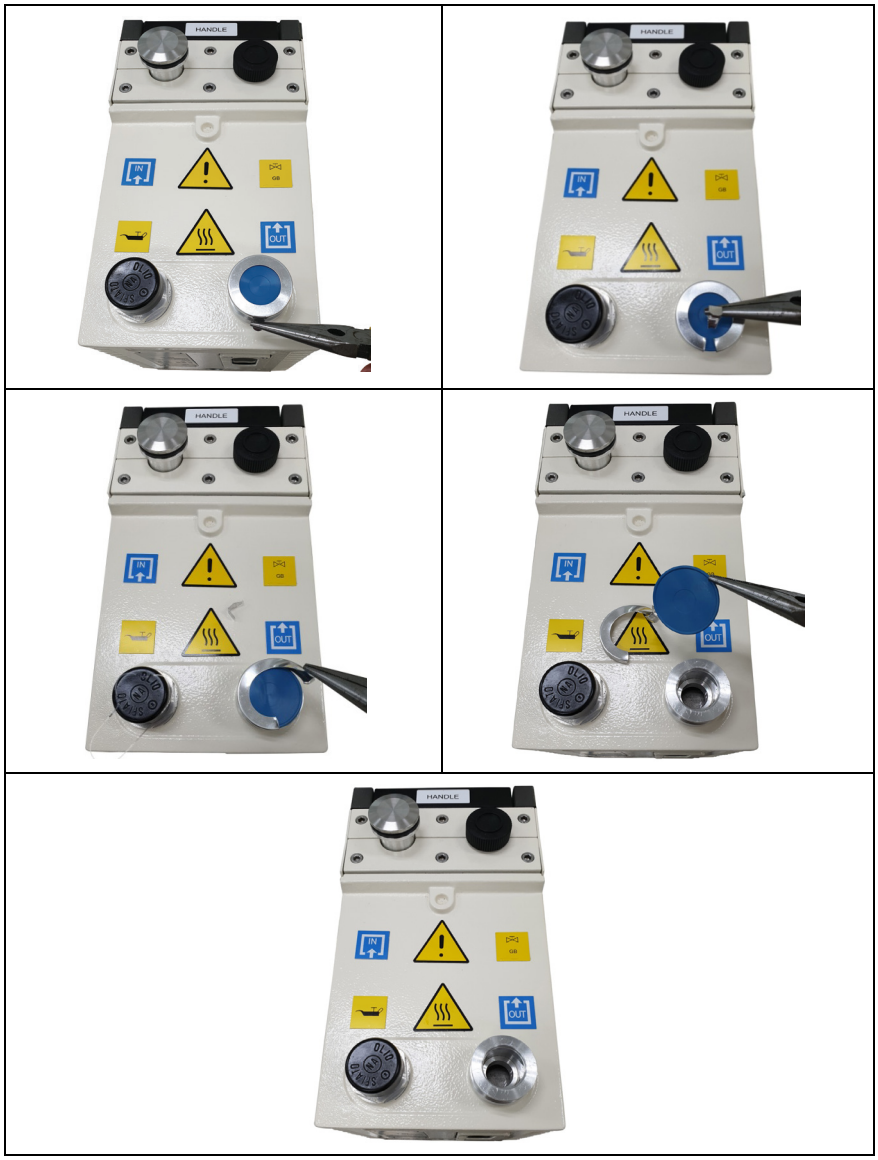

Figura 2

AVVERTENZA!

Durante l'installazione prestare la massima attenzione che la flangia di aspirazione sia collegata alla camera da evacuare e che la flangia di scarico non sia tappata (vedere la figura seguente). La pompa non deve essere usata come compressore.

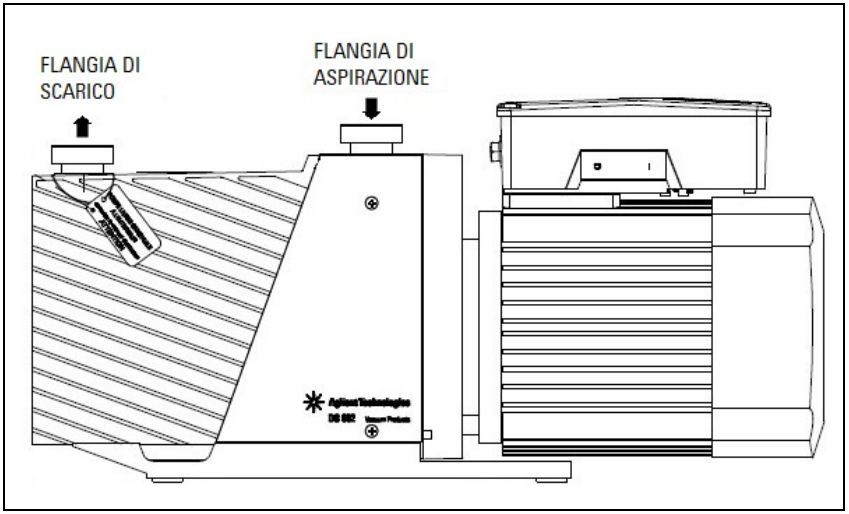

Figura 3

AVVERTENZA!

Allo scopo di garantire che la pressione interna al contenitore dell'olio non superi mai il valore massimo ammissibile di 1.7 bar (abs), sulla pompa è installato un dispositivo di sicurezza indicato dalla freccia rossa nella figura sottostante. Trattandosi di dispositivo di sicurezza, questo tappo non va in alcun modo sostituito, danneggiato o manomesso. E' ammessa la sua momentanea rimozione (tramite svitamento) per consentire la carica dell'olio nella pompa quando necessario. E' responsabilità dell'utente riavvitare il dispositivo nella sua posizione originaria dopo l'avvenuta carica dell'olio e prima dell'avvio della pompa.
L'inosservanza di queste precauzioni può causare danni alla macchina ed all'operatore.
Nel caso in cui la pressione del contenitore dell'olio superi i valori limite ammessi (ad esempio per scarico ostruito) una miscela di gas aspirati e olio fuoriuscirà dal tappo di sicurezza. Questa fuoriuscita continuerà fino allo spegnimento della pompa e/o alla rimozione della causa di sovrappressione (ad esempio rimozione dell'ostruzione dello scarico).

Figura 4

ATTENZIONE! Controllare che la tensione di alimentazione corrisponda a quella indicata sul cartellino del motore.

Collegare la pompa all'alimentazione.

ATTENZIONE! Nel caso di motore trifase, una inversione di polarità provoca l'inversione del verso di rotazione della pompa, con conseguenti possibili danni di natura meccanica.

Uso

Prima di mettere la pompa in servizio effettivo è necessario, per il raggiungimento del vuoto limite, far marciare per circa un'ora la pompa con zavorra aperta allo scopo di eliminare l'umidità nell'olio.

L'accensione della pompa non richiede particolari manovre; è sufficiente collegarla all'alimentazione elettrica agendo sull'interruttore bipolare (versione con motore monofase) o onnipolare (versione con motore trifase).

AVVERTENZA! **La pompa è progettata per operare con fluidi neutri o non corrosivi. È assolutamente vietato l'impiego con sostanze potenzialmente esplosive o infiammabili.**

Lo spegnimento della pompa non richiede particolari manovre; è sufficiente scollegarla dall'alimentazione elettrica agendo sull'interruttore bipolare (versione con motore monofase) o onnipolare (versione con motore trifase).

Manutenzione

Il personale addetto alla condotta ed alla manutenzione della pompa deve essere ben addestrato e deve avere un'approfondita conoscenza delle norme antinfortunistiche.

AVVERTENZA! **Le alte tensioni possono causare morte al contatto. Operare sempre con la massima cautela e secondo le norme antinfortunistiche in vigore.**

AVVERTENZA! **Quando la macchina è alimentata prestare attenzione per la presenza di parti in movimento e di alta tensione.**

AVVERTENZA! **Nel caso si debba procedere ad operazioni di manutenzione della pompa al termine di un periodo di esercizio, è necessario lasciarla raffreddare, poichè la temperatura esterna può superare i 60 °C.**

AVVERTENZA!

Escludere sempre l'alimentazione della pompa prima di compiere operazioni di manutenzione. Apporre specifici cartelli di avvertenza: APPARECCHIATURA IN MANUTENZIONE - NON INSERIRE L'ALIMENTAZIONE, in corrispondenza dell'interruttore di alimentazione. Al termine ripristinare i dispositivi di sicurezza.

AVVERTENZA!

Non effettuare la sostituzione dell'olio subito dopo l'arresto della macchina, in quanto la temperatura dello stesso può essere elevata.

ATTENZIONE!

In fase di sostituzione di pezzi, operare con attenzione. In particolare nel caso di adozione di motore trifase, una inversione di polarità provoca l'inversione del verso di rotazione della pompa, con conseguenti possibili danni di natura meccanica.

NOTA

Prima di rispedire al costruttore una pompa per riparazioni è indispensabile compilare e far pervenire al locale ufficio vendite la scheda "Sicurezza e Salute" allegata al presente manuale di istruzioni. Copia della stessa deve essere inserita nell'imballo della pompa prima della spedizione.

Qualora una pompa dovesse essere rottamata, procedere alla sua eliminazione nel rispetto delle normative nazionali specifiche.

Smaltimento

Significato del logo "WEEE" presente sulle etichette

Il simbolo qui sotto riportato applicato in ottemperanza alla direttiva CE denominata "WEEE".

Questo simbolo **(valido solo per i paesi della Comunità Europea)** indica che il prodotto sul quale è applicato, NON deve essere smaltito insieme ai comuni rifiuti domestici o industriali, ma deve essere avviato ad un sistema di raccolta differenziata.

Si invita pertanto l'utente finale a contattare il fornitore del dispositivo, sia esso la casa madre o un rivenditore, per avviare il processo di raccolta e smaltimento, dopo opportuna verifica dei termini e condizioni contrattuali di vendita.

Per maggiori informazioni riferirsi a:

http://www.agilent.com/environment/product/index.shtml

2 Gebrauchsanleitung

Allgemeine Hinweise 26
Verwendete Symbole 28
Lagerung 29
Vor der Installation 30
Installation 31
Gebrauch 37
Wartung 38
Entsorgung 40

Übersetzung der Originalanleitungen

Allgemeine Hinweise

Dieses Gerät ist für den professionellen Gebrauch bestimmt. Vor dem Gebrauch soll der Benutzer dieses Handbuch sowie alle weiteren von Agilent mitgelieferten Zusatzinformationen genau lesen. Bei vollständiger bzw. teilweiser Nichtbeachtung der enthaltenen Hinweise, unsachgemäßem Gebrauch durch ungeschultes Personal, nicht autorisierten Eingriffen und Benutzung unter Mißachtung der nationalen Bestimmungen übernimmt Firma Agilent keinerlei Haftung.

Die Pumpen DS102 1Ph, DS202 1Ph, DS302 1Ph, DS402 1Ph, DS402 3Ph, DS602 1Ph und DS602 3Ph sind dichte ölbadgeschmierte zweistufige Flügelzellenpumpen, die von einem Ein- oder Dreiphasenstrommotor betätigt werden.

Diese Hochvakuumpumpen eignen sich für das Pumpen von nicht korrosiven Gasen.

In den folgenden Abschnitten sind alle erforderlichen Informationen für die Sicherheit des Bedieners bei der Verwendung des Geräts aufgeführt. Detaillierte technische Informationen sind im Anhang "Technical Information" enthalten.

In dieser Gebrauchsanleitung werden Sicherheitshinweise folgendermaßen hervorgehoben:

WARNUNG!

Die Warnhinweise richten die Aufmerksamkeit des Bedieners auf eine spezielle Prozedur oder Praktik, die bei unkorrekter Ausführung schwere Personenschäden zur Folge haben könnte.

VORSICHT!

Die Vorsichtshinweise vor bestimmten Prozeduren machen den Bediener darauf aufmerksam, dass bei Nichteinhaltung Schäden an der Anlage entstehen können.

HINWEIS

Die Hinweise enthalten wichtige Informationen, die aus dem Text hervorgehoben werden.

Verwendete Symbole

Folgende Symbole wurden durchgängig in allen Illustrationen verwendet:

Symbole	Beschreibung
	Saugflansch
	Ablassflansch
	Betriebsflüssigkeiten auffüllen
	Gasballastventil
	Heiße Oberfläche –Verbrennungsgefahr bei Berührung
	Gefahr – siehe Installations- und Gebrauchsanleitung
	Gefahr von Stromschlägen

Lagerung

Während des Transports und der Lagerung der Pumpen sollen die folgenden Umgebungsbedingungen gegeben sein:

- Temperatur: -20 °C bis +70 °C
- Relative Feuchtigkeit: 0 – 95 % (niederschlagsfrei)

Vor der Installation

Die Pumpe wird in einer speziellen Schutzverpackung geliefert. Eventuelle Transportschäden sind der zuständigen örtlichen Verkaufsstelle zu melden.

Das Verpackungsgewicht beträgt, einschließlich der Pumpe, maximal 32 Kg.

Beim Auspacken ist darauf zu achten, daß die Pumpe nicht fallengelassen oder Stößen oder Vibrationen ausgesetzt wird.
Das Verpackungsmaterial ist ordnungsgemäß zu entsorgen. Es ist vollständig recyclebar und entspricht der EG-Richtlinie 85/399 für den Umweltschutz.

HINWEIS Die Pumpe kann, wenn sie einfach der Atmosphäre ausgesetzt ist, nicht beschädigt werden. Sie sollte jedoch bis zur Installation an der Anlage geschlossen bleiben, um Verunreinigungen durch Staub zu vermeiden.

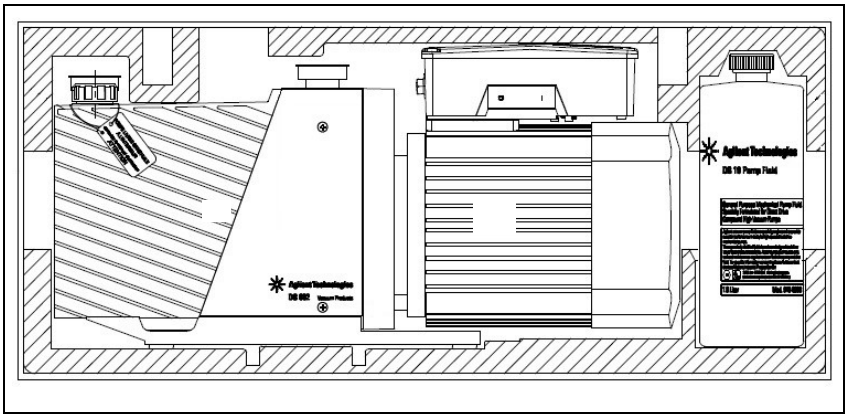

Abbildung 1

Installation

Die Pumpe darf nicht in Umgebungen installiert und/oder benutzt werden, die ungeschützt vor Witterungsbedingungen (Regen, Frost, Schnee), Staub und aggressiven Gasen sind und in denen Explosions- oder erhöhte Brandgefahr besteht.

Während des Betriebs sollen die folgenden Umgebungsbedingungen gegeben sein:

- Temperatur: +12 °C bis +40 °C
- Relative Feuchtigkeit: 0 – 95 % (niederschlagsfrei).

WARNUNG!

Zum Schutz vor Kurzschlüssen oder Überlastungen, muss ein automatischer Schalter Typ C in die Hauptspeisungsleitung zu den Agilent-Vorrichtungen installiert werden (siehe folgende Tabelle):

P/N	110 Vac	220 Vac	380 Vac
9499315	10 A	6 A	
9499320	10 A	6 A	
9499325	10 A	6 A	
9499330	16 A	7.5 A	
949331		6 A	6 A
9499335	16 A	7.5 A	
9499336		6 A	4 A

WARNUNG!

Die Pumpe muss so installiert werden, dass die Stromversorgung leicht unterbrochen werden kann.

Stromkabel für einphasige Pumpen: Für den Anschluss muss ein dreipoliges Kabel verwendet werden (Außenleiter + Neutral + Masse). Der Kabelquerschnitt muss mindestens 0,75 mm^2 betragen (AWG18).

VORSICHT! Die Pumpe ist vor ihrer Inbetriebnahme mit Schmieröl zu füllen, da sie leer geliefert wird.

WARNUNG!

Nehmen Sie die Schutzkappe auf dem Ansaugflansch ab. Nehmen Sie die Metallkappe und die Membran vom Ausgangsflansch ab und halten Sie sich dabei an den in der Bildfolge dargestellten Ablauf.

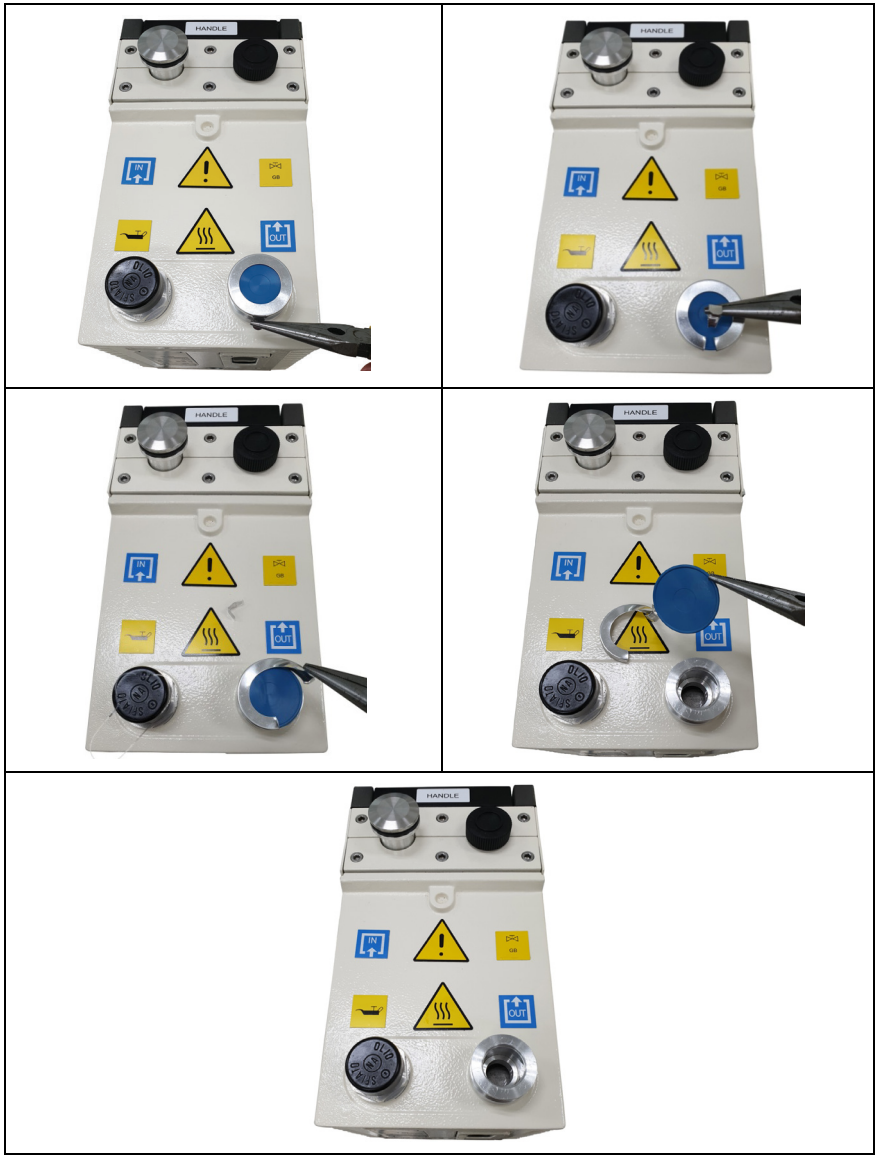

Abbildung 2

WARNUNG!

Bei der Installation ist unbedingt darauf zu achten, dass der Saugflansch an die zu entleerende Kammer angeschlossen ist und der Ablassflansch nicht verschlossen ist (siehe nachstehende Abbildung). Die Pumpe darf nicht als Verdichter verwendet werden.

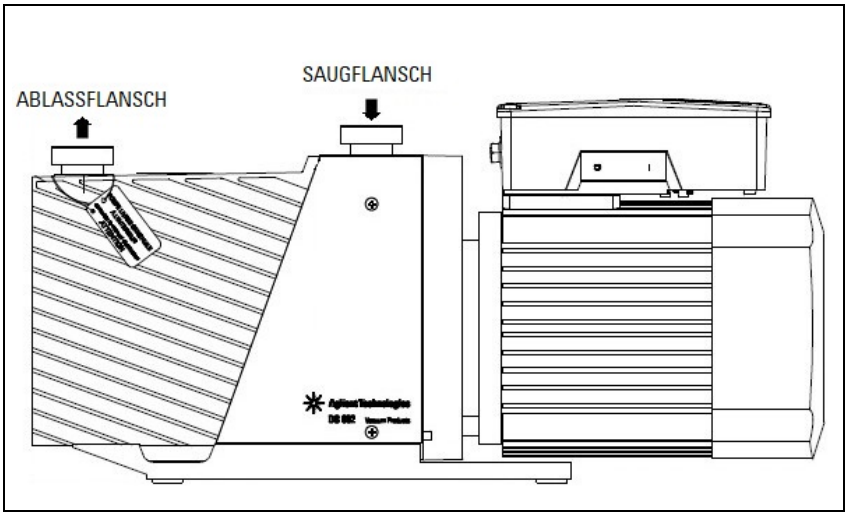

Abbildung 3

WARNUNG!

Zur Gewährleistung, dass der Innendruck im Ölbehälter den zulässigen Höchstwert von 1.7 bar (abs) nicht übersteigt, ist in der Pumpe eine Sicherheitsvorrichtung installiert (siehe roter Pfeil im Bild). Es handelt sich um eine Sicherheitsvorrichtung, somit darf der Verschluss auf keinen Fall ersetzt, beschädigt oder manipuliert werden. Eine vorübergehende Entfernung (durch Abschrauben) ist möglich, damit das Öl bei Bedarf nachgefüllt werden kann. Der Anwender muss die Vorrichtung wieder in ihren Platz einschrauben, nachdem das Öl eingefüllt wurde und bevor die Pumpe wieder gestartet wird.
Die Nichtbeachtung dieser Vorsichtsmaßnahmen kann der Maschine und dem Bediener Schaden zufügen.
Falls der Druck in dem Ölbehälter die zugelassenen Werte überschreitet (zum Beispiel aufgrund eines verstopften Auslasses), wird eine Mischung aus angesaugtem Gas und Öl aus dem Sicherheitsverschluss treten. Dieses Austreten erfolgt bis zum Abschalten der Pumpe und/oder Beseitigung des Grunds für den Überdruck (zum Beispiel Entfernung der Verstopfung am Auslass).

Abbildung 4

VORSICHT! Kontrollieren, daß die Versorgungsspannung mit der Spannungsangabe auf dem Typenschild des Motors übereinstimmt.

Die Pumpe an das Versorgungsnetz anschließen.

VORSICHT! Bei Dreiphasenstrommotoren bewirkt eine Polumkehrung die Umkehrung des Drehsinns der Pumpe, was Schäden an der Mechanik zur Folge haben kann.

Gebrauch

Vor der eigentlichen Inbetriebnahme der Pumpe ist es zur Erreichung des Grenzvakuums erforderlich, die Pumpe ungefähr eine Stunde mit geöffnetem Ballast laufen zu lassen, um die Feuchtigkeit aus dem Öl zu entfernen.

Die Einschaltung der Pumpe erfordert keine speziellen Schritte, sie braucht nur durch Betätigung des zweipoligen (Version mit Einphasenstrommotor) oder des allpoligen Trennschalters (Version mit Dreiphasenstrommotor) an die elektrische Energieversorgungsquelle angeschlossen werden.

WARNUNG!

Die Pumpe ist für den Betrieb mit neutralen und nicht korrosiven Fluiden konzipiert. Der Einsatz mit potentiell explosions- oder feuergefährlichen Substanzen ist streng verboten.

Die Ausschaltung der Pumpe erfordert keine speziellen Schritte, sie braucht nur durch Betätigung des zweipoligen (Version mit Einphasenstrommotor) oder des allpoligen Trennschalters (Version mit Dreiphasenstrommotor) von der elektrischen Energieversorgungsquelle getrennt zu werden.

Wartung

Das für den Betrieb und die Wartung zuständige Personal soll geschult sein und über eine solide Kenntnis der Unfallschutzvorschriften verfügen.

WARNUNG!

Hochspannungen können bei Kontakt tödliche Folgen haben. Es ist stets mit größter Vorsicht und gemäß der geltenden Unfallschutzvorschriften vorzugehen.

WARNUNG!

Bei eingeschaltetem Gerät ist auf Bewegungs- und Hochspannungsteile zu achten.

WARNUNG!

Falls die Pumpe im Anschluß an den Betrieb gewartet werden soll, ist abzuwarten, bis sie abgekühlt ist, da ihre Oberfläche eine Temperatur von 60°C überschreiten kann.

WARNUNG!

Vor Wartungsarbeiten ist die Pumpe stets energiefrei zu schalten. Am Netzschalter sind spezielle Warnschilder "INSTANDHALTUNG AM GERÄT – NICHT EINSCHALTEN" anzubringen. Nach Abschluß der Arbeiten sind die Sicherheitseinrichtungen wieder zu aktivieren.

WARNUNG! **Keine Ölwechsel unmittelbar nach Stillsetzung des Gerätes vornehmen, da die Öltemperatur sehr hoch sein kann.**

VORSICHT! Bei Ersatz von Teilen ist mit Vorsicht vorzugehen. Insbesondere bei der Version mit Dreiphasenstrommotor bewirkt eine Polumkehrung die Umkehrung des Drehsinns der Pumpe, was Schäden an der Mechanik zur Folge haben kann.

HINWEIS Bevor dem Hersteller eine Pumpe zur Reparatur zurückgesandt wird, ist das Formular “Sicherheit und Gesundheit” in der Anlage zum vorliegenden Handbuch auszufüllen und der lokalen Verkaufsstelle zuzustellen. Eine Kopie des Formulars ist der Pumpenverpackung vor dem Versand beizulegen.

Bei eventueller Verschrottung einer Pumpe ist diese entsprechend der einschlägigen nationalen Vorschriften zu entsorgen.

Entsorgung

Bedeutung des "WEEE" Logos auf den Etiketten

Das folgende Symbol ist in Übereinstimmung mit der EU-Richtlinie WEEE (Waste Electrical and Electronic Equipment) angebracht.

Dieses Symbol **(nur in den EU-Ländern gültig)** zeigt an, dass das betreffende Produkt nicht zusammen mit Haushaltsmüll entsorgt werden darf sondern einem speziellen Sammelsystem zugeführt werden muss.

Der Endabnehmer sollte daher den Lieferanten des Geräts - d.h. die Muttergesellschaft oder den Wiederverkäufer - kontaktieren, um den Entsorgungsprozess zu starten, nachdem er die Verkaufsbedingungen geprüft hat.

Für weitere Informationen:

http://www.agilent.com/environment/product/index.shtml

3
Mode d’emploi

Indications Generales 42
Symboles utilisés 44
Emmagasinage 45
Préparation pour l'installation 46
Installation 47
Utilisation 53
Maintenance 54
Mise au rebut 56

Traduction de la mode d’emploi originale

Indications Generales

Cet appareillage a été conçu en vue d'une utilisation professionnelle. Il est conseillé à l'utilisateur de lire attentivement cette notice d'instructions ainsi que toute autre indication fournie par Agilent avant d'utiliser l'appareil. Agilent décline par conséquent toute responsabilité en cas de non-respect total ou partiel des instructions fournies, d'utilisation incorrecte de la part d'un personnel non formé, d'opérations non autorisées ou d'un emploi contraire aux réglementations nationales spécifiques.

Les pompes DS102 1Ph, DS202 1Ph, DS302 1Ph, DS402 1Ph, DS402 3Ph, DS602 1Ph e DS602 3Ph sont des pompes rotatives à deux stades à palettes, étanches en bain d'huile, actionnées par un moteur électrique mono ou triphasé.

Ces pompes à vide poussé sont adaptées au pompage de gaz non corrosifs.

Les paragraphes suivants fournissent toutes les indications nécessaires pour garantir la sécurité de l'opérateur pendant l'utilisation de l'appareillage. Des renseignements plus détaillés se trouvent dans l'appendice “Technical Information”.

Cette notice utilise les signes conventionnels suivants:

AVERTISSEMENT!

Les messages d'avertissement attirent l'attention de l'opérateur sur une procédure ou une manœuvre spéciale qui, si elle n'est pas effectuée correctement, risque de provoquer de graves lésions.

ATTENTION!

Les messages d'attention apparaissent avant certaines procédures qui, si elles ne sont pas observées, pourraient endommager sérieusement l'appareillage.

NOTE

Les notes contiennent des renseignements importants, isolés du texte.

Symboles utilisés

Les symboles suivants sont utilisés dans les différentes illustrations:

Symboles	Description
	Bride d’aspiration
	Bride d’évacuation
	Remplissage fluide de fonctionnement
	Soupape de lest
	Surface chaude “Risque de brûlure en cas de contact”
	Danger “Voir instructions d’installation/Mode d’emploi”
	Danger, risque d’électrisation

Emmagasinage

Pendant le transport et l'emmagasinage des pompes, il faut veiller à respecter les conditions environnementales suivantes :

- température: de -20 °C à +70 °C
- humidité relative: 0 – 95 % (non condensante)

Préparation pour l'installation

La pompe est fournie dans un emballage de protection spécial; si l'on constate des marques de dommages pouvant s'être produits pendant le transport, contacter aussitôt le bureau de vente local.

Le poids total de l'emballage et de la pompe est au maximum de 32 Kg.

Pendant l'opération d'ouverture de l'emballage, veiller tout particulièrement à ne pas laisser tomber la pompe et à ne lui faire subir aucun choc ni aucune vibration

Ne pas jeter l'emballage dans la nature. Le matériel est entièrement recyclable et il est conforme à la directive CEE 85/399 en matière de protection de l'environnement.

NOTE La pompe ne peut être endommagée en restant simplement exposée à l'atmosphère. Il est de toute façon conseillé de la garder dans son emballage jusqu'au moment de sa mise en fonction afin d'éviter toute pollution due à la poussière

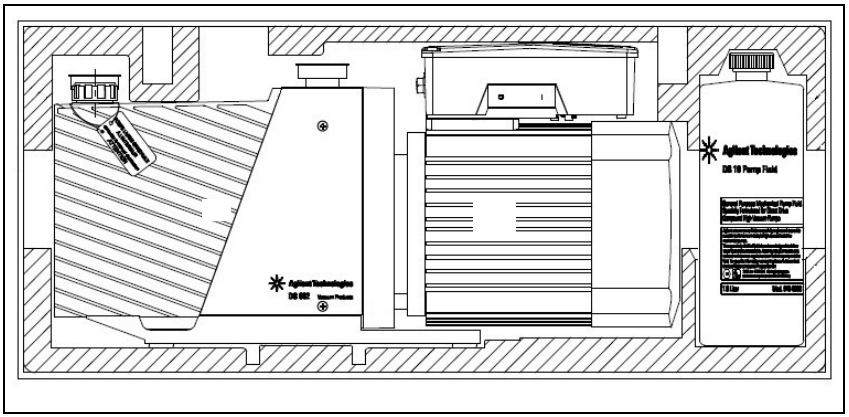

Figure 1

Installation

Ne pas installer et/ou utiliser la pompe dans des milieux exposés aux agents atmosphériques (pluie, gel, neige), à des poussières, à des gaz agressifs ainsi que dans des milieux explosifs ou à risque élevé d'incendie.

Pendant le fonctionnement, il est nécessaire de respecter les conditions environnementales suivantes :

- Température: de +12 °C à +40 °C
- Humidité relative : 0 – 95 % (non condensante).

AVERTISSEMENT!

Pour protéger contre les court-circuits ou les surintensités, il faut installer un disjoncteur automatique Type C sur la ligne d'alimentation principale vers les dispositifs Agilent, de bonne capacité (voir tableau ci-dessous):

P/N	110 Vac	220 Vac	380 Vac
9499315	10 A	6 A	
9499320	10 A	6 A	
9499325	10 A	6 A	
9499330	16 A	7.5 A	
9499331		6 A	6 A
9499335	16 A	7.5 A	
9499336		6 A	4 A

AVERTISSEMENT! **La pompe doit être installée de manière à permettre une interruption facile du circuit d'alimentation électrique.**

Câble d'alimentation pour pompes monophasées: le câble d'alimentation électrique doit être un câble à trois torons (Phase+Neutre+Terre). La section du câble doit être de 0,75 mm^2 minimum (AWG18).

ATTENTION! Avant toute utilisation de la pompe, il est impératif de procéder à son remplissage en huile de lubrification car elle est livrée vide.

AVERTISSEMENT! **Retirez le bouchon de protection de la bride d'aspiration. Retirez la capsule métallique et la membrane de la bride d'évacuation en suivant la procédure illustrés sur la séquence photographique.**

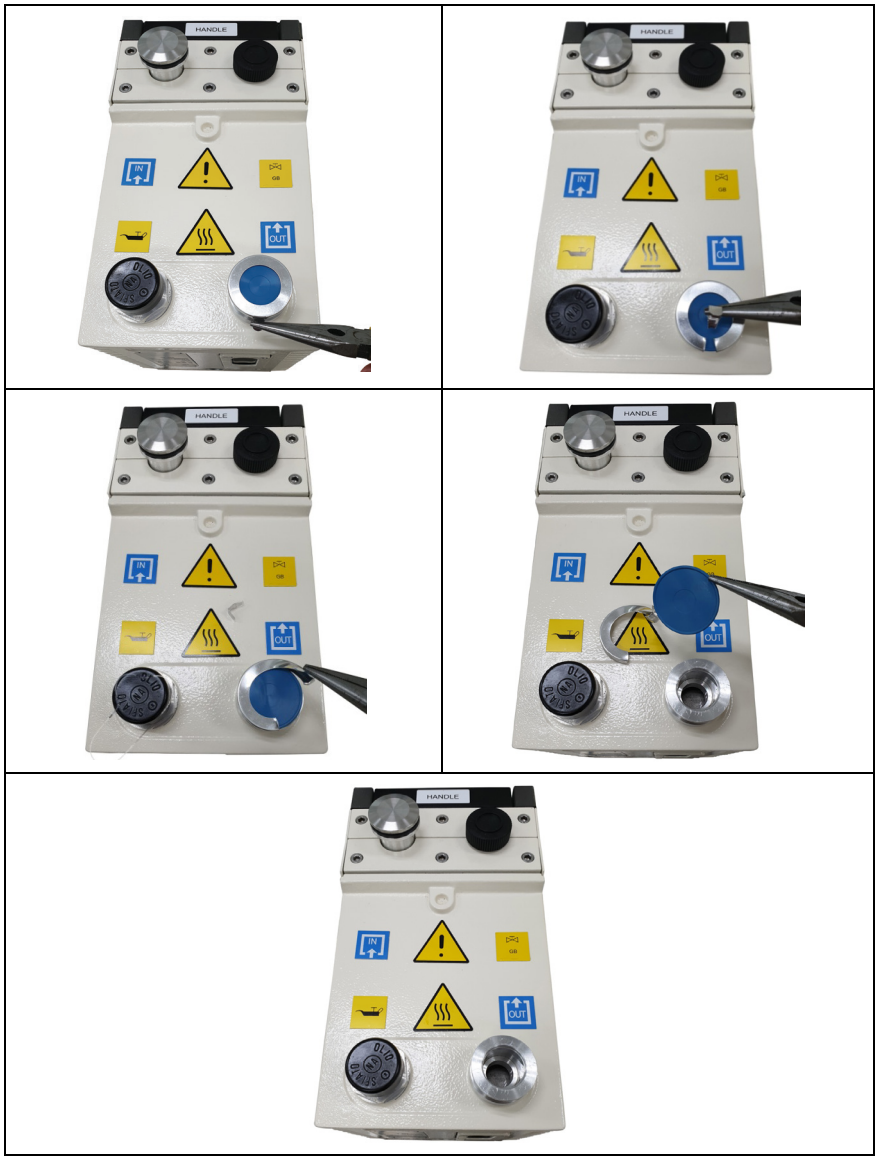

Figure 2

AVERTISSEMENT!

Pendant l'installation, faire très attention que la bride d'aspiration soit reliée à la chambre à vider et que la bride d'évacuation ne soit pas bouchée (voir la figure ci-après). La pompe ne doit pas être utilisée comme un compresseur.

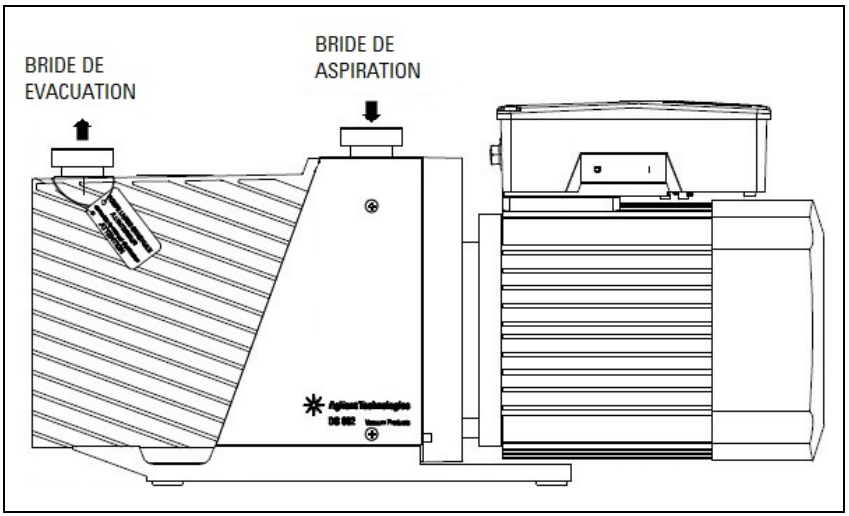

Figure 3

AVERTISSEMENT!

Afin de garantir que la pression interne du réservoir d'huile ne dépasse jamais la valeur maximum admissible de 1,7 bars (abs), un dispositif de sécurité a été installé (indiqué par la flèche rouge ci-dessous). S'agissant d'un dispositif de sécurité, ce bouchon ne doit en aucun cas être remplacé, endommagé ou modifié. Il est possible de le retirer momentanément (en le dévissant) pour permettre le remplissage d'huile dans la pompe lorsque cela s'avère nécessaire. L'utilisateur est tenu de revisser le dispositif dans sa position initiale après avoir rempli le réservoir d'huile de la pompe et avant de la démarrer.
Tout manquement à ces consignes comporte des risques pour la machine et l'opérateur.
Au cas où la pression du réservoir d'huile dépasserait les valeurs limites admises (ex. suite à colmatage de l'évacuation) un mélange de gaz aspirés et d'huile sortira du bouchon de sécurité. Cette décharge de pression continuera jusqu'à l'arrêt de la pompe ou l'élimination de la cause de la surpression (élimination du colmatage de l'évacuation).

Figure 4

ATTENTION! Contrôler que la tension d'alimentation correspond à la tension indiquée sur la plaquette du moteur.

Brancher la pompe à la source d'alimentation.

ATTENTION! En cas de moteur triphasé, une inversion de polarité provoque l'inversion du sens de rotation de la pompe et peut entraîner des dommages de nature mécanique

Utilisation

Avant la mise en service de la pompe, il est nécessaire, pour atteindre le vide maximum, de faire fonctionner la pompe pendant environ une heure avec le reniflard ouvert afin de supprimer l'humidité de l'huile.

La mise en marche de la pompe ne requiert aucune manœuvre particulière ; il suffit de la brancher à l'alimentation électrique et d'agir sur l'interrupteur bipolaire (version avec moteur monophasé) ou unipolaire (version avec moteur triphasé).

AVERTISSEMENT!

La pompe a été conçue pour fonctionner avec des fluides neutres ou non corrosifs. L'emploi de substances potentiellement explosives ou inflammables est strictement interdit.

L'arrêt de la pompe ne requiert aucune manœuvre particulière ; il suffit de la débrancher de l'alimentation électrique en agissant sur l'interrupteur bipolaire (version avec moteur monophasé) ou unipolaire (version avec moteur triphasé).

Maintenance

Le personnel chargé de la conduite et de la maintenance de la pompe doit avoir reçu la formation nécessaire et posséder une connaissance approfondie des normes de prévention des accidents du travail.

AVERTISSEMENT!

Les hautes tensions peuvent entraîner la mort par contact. Veiller à toujours opérer avec le maximum de prudence et dans le respect des normes de prévention des accidents du travail en vigueur.

AVERTISSEMENT!

Lorsque la machine est sous alimentation, faire attention à la présence d'organes en mouvement et de haute tension.

AVERTISSEMENT!

En cas de nécessité de procéder à des opérations de maintenance de la pompe au terme d'une période de fonctionnement, il est indispensable de la laisser refroidir car sa température extérieure peut être supérieure à 60°C.

AVERTISSEMENT!

Avant toute opération de maintenance, il est impératif de toujours couper l'alimentation de la pompe. Placer les pancartes spécifiques d'avertissement : APPAREILLAGE EN COURS DE MAINTENANCE – NE PAS BRANCHER L'ALIMENTATION, près de l'interrupteur d'alimentation. Au terme des opérations de maintenance, restaurer les dispositifs de sécurité.

AVERTISSEMENT!

Ne pas effectuer la substitution d'huile immédiatement après l'arrêt de la machine car la température de cette dernière peut être élevée.

ATTENTION!

En phase de substitution de pièces, opérer avec le maximum d'attention. En particulier, en cas de moteur triphasé, une inversion de polarité provoque l'inversion du sens de rotation de la pompe et peut entraîner des dommages de nature mécanique.

NOTE

Avant de retourner une pompe au constructeur pour réparation, il est indispensable de remplir et d'adresser au bureau local de vente la fiche "Sécurité et Santé" jointe à la présente notice d'instructions. Une copie de celle-ci devra être mise dans l'emballage de la pompe avant expédition.

En cas de mise au rebut de la pompe, procéder à son élimination conformément aux réglementations nationales en la matière.

Mise au rebut

Signification du logo "WEEE" figurant sur les étiquettes

Le symbole ci-dessous est appliqué conformément à la directive CE nommée "WEEE".

Ce symbole **(uniquement valide pour les pays de la Communauté européenne)** indique que le produit sur lequel il est appliqué NE doit PAS être mis au rebut avec les ordures ménagères ou les déchets industriels ordinaires, mais passer par un système de collecte sélective.

Après avoir vérifié les termes et conditions du contrat de vente, l'utilisateur final est donc prié de contacter le fournisseur du dispositif, maison mère ou revendeur, pour mettre en œuvre le processus de collecte et mise au rebut.

Pour plus d'informations, rendez-vous à l'adresse:

http://www.agilent.com/environment/product/index.shtml

4
Instructions for Use

General Information 58
Symbols used 60
Storage 61
Preparation for Installation 62
Installation 63
Use 68
Maintenance 69
Disposal 71

Original Instructions

General Information

This equipment is destined for use by professionals. The user should read this instruction manual and any other additional information supplied by Agilent before operating the equipment. Agilent will not be held responsible for any events occurring due to non-compliance, even partial, with these instructions, improper use by untrained persons, non-authorized interference with the equipment or any action contrary to that provided for by specific national standards.

The DS102 1Ph, DS202 1Ph, DS302 1Ph, DS402 1Ph, DS402 3Ph, DS602 1Ph and DS602 3Ph pumps are dual-stage, rotary vane pumps oil sealed, driven by a single-phase or three-phase electric motor.

These high vacuum pumps are suitable for pumping non corrosive gases.

The following paragraphs contain all the information necessary to guarantee the safety of the operator when using the equipment. Detailed information is supplied in the appendix "Technical Information".

This manual uses the following standard protocol:

WARNING!

Warning messages are for attracting the attention of the operator to a particular procedure or practice which, if not followed correctly, could lead to serious injury.

CAUTION!

The caution messages are displayed before procedures which, if not followed, could cause damage to the equipment.

NOTE

Notes contain important information taken from the text.

Symbols used

The following symbols are used consistently throughout in all illustration:

Symbols	Description
	Suction flange
	Exhaust flange
	Filling up operating fluid
	Gas Ballast valve
	Caution, hot surface: “Danger of burns if hot parts are touched”
	Warning “see installation/operating mode instruction”
	Caution, risk of electric shock

Storage

When transporting and storing the pumps, the following environmental requirements should not be exceeded:

- temperature: from -20° to +70 °C
- relative humidity: 0 – 95 % (non-condensing)

Preparation for Installation

The pump is supplied in a special protective packing. If this shows signs of damage which may have occurred during transport, contact your local sales office.

Total weight of the pack, including the pump, is approx. 32 Kg.

When unpacking the pump, be sure not to drop it and avoid any kind of sudden impact or shock vibration to it.

Do not dispose of the packing materials in an unauthorized manner. The material is 100 % recyclable and complies with EEC Directive 85/399.

NOTE Normal exposure to the environment cannot damage the pump. Nevertheless, it is advisable to keep it closed until it is installed in the system, thus preventing any form of pollution by dust.

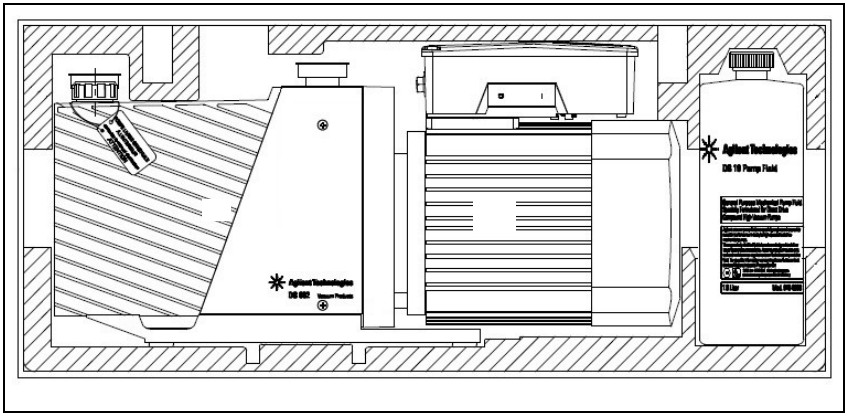

Figure 1

Installation

Do not install or use the pump in an environment exposed to atmospheric agents (rain, snow, ice), dust, aggressive gases, or in explosive environments or those with a high fire risk. During operation, the following environmental conditions must be respected:

- temperature: from +12 °C to +40 °C
- relative humidity: 0 – 95 % (non-condensing)

WARNING!

Protect against short circuits and overload by installing on Agilent Device electrical main line an automatic circuit breaker Type C of proper capacity (see table here below):

P/N	110 Vac	220 Vac	380 Vac
9499315	10 A	6 A	
9499320	10 A	6 A	
9499325	10 A	6 A	
9499330	16 A	7.5 A	
9499331		6 A	6 A
9499335	16 A	7.5 A	
9499336		6 A	4 A

WARNING!

The pump must be installed in a way that allows an easy interruption of the line voltage.

Power supply cord for single-phase pumps. The correct cable for electrical wiring is a three wires (Ph+N+Earth) cable. The wire section has to be at least 0.75 mm^2 (AWG18).

CAUTION! Before starting the pump, fill up with lubricating oil as the pump is delivered empty.

WARNING! **Remove protective cap from inlet flange. Remove metallic cap and rubber membrane from exhaust flange following the procedure showed in the photo sequence.**

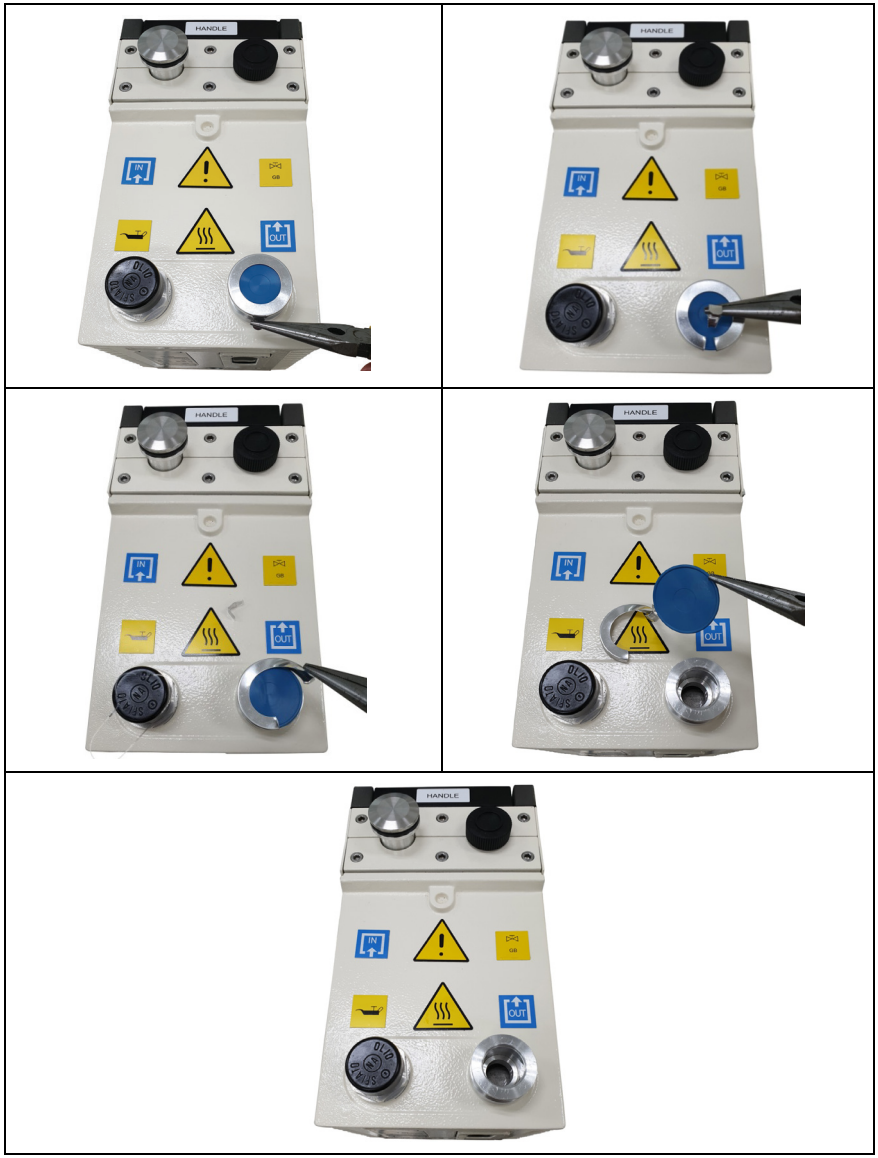

Figure 2

WARNING!

During installation, pay maximum attention that the suction flange is connected to the vacuum chamber and the exhaust flange is not closed (see the following figure). The pump must not be used as a compressor.

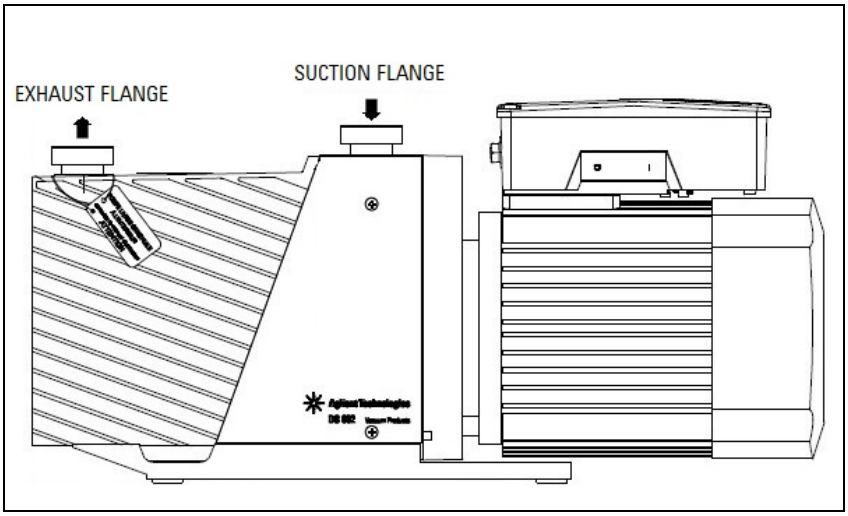

Figure 3

WARNING!

A safety device (indicated by the red arrow in the figure below) is installed on the pump to guarantee that the pressure inside the oil vessel never exceeds the maximum permitted value of 1.7 bar (abs). This is a safety device and for this reason the cap must not be replaced, damaged or tampered with. Temporary removal (by unscrewing) is allowed to fill oil into the pump when needed. Users are responsible for screwing the device back in its original position after filling and before starting the pump.
Failure to respect these precautions may cause damage to the machine and injury to the operator.
A mixture of intake gas and oil will issue from the safety cap if the pressure in the oil vessel exceeds the allowed limit values (e.g. obstructed exhaust). The flow will continue until the pump is stopped and/or the cause of overpressure is removed (e.g. obstruction is removed from exhaust).

Figure 4

CAUTION! Check that your electrical mains voltage corresponds to that indicated on the motor's plate.

Connect the pump to the power supply.

CAUTION! Pay special attention to the three-phase motor, where an inversion of polarity causes inversion of the direction of rotation of the pump with consequent possibilities of mechanical damage.

Use

Before being put into service, in order to reach maximum vacuum, the pump must be left running for about an hour with the gas ballast valve open. This will eliminate any humidity from the oil.

There are no special procedures for switching the pump on; it needs only to be connected to the electric power by means of the bipolar switch (version with single-phase motor) or of the multipolar switch (version with three-phase motor).

WARNING! **The pump is designed for operation with neutral or non-corrosive fluids. It is absolutely forbidden to use potentially explosive or flammable substances.**

There are no special procedures for switching the pump off; it needs only to be disconnected from the electric power by means of the bipolar switch (version with single-phase motor) or of the multipolar switch (version with three-phase motor).

Maintenance

Personnel responsible for pump operation and maintenance must be well-trained and must be aware of the accident prevention rules.

WARNING!

Death may result from contact with high voltages. Always take extreme care and observe the accident prevention regulations in force.

WARNING!

When machine is powered take care on account of moving parts and high voltages.

WARNING!

If you have to perform maintenance on the pump after a considerable time in operation, leave it to cool as temperature of the outer surface may be in excess of 60 °C.

WARNING!

Always disconnect the power supply to the pump before starting maintenance work. Place a special warning signs over the power supply breaker switch: MACHINE UNDERGOING MAINTENANCE - DO NOT POWER ON. When finished, remove the safety warning.

WARNING!

Do not change the oil immediately after stopping the machine as the oil temperature may still be high.

CAUTION!

When replacing a part, take great care. Pay special attention to the three-phase motor, where an inversion of polarity causes inversion of the direction of rotation of the pump with consequent possibilities of mechanical damage.

NOTE

Before returning the pump to the constructor for repairs the "Health and Safety" sheet attached to this instruction manual must be filled-in and sent to the local sales office. A copy of the sheet must be inserted in the pump package before shipping.

If a pump is to be scrapped, it must be disposed of in accordance with the specific national standards.

Disposal

Meaning of the "WEEE" logo found in labels

The following symbol is applied in accordance with the EC WEEE (Waste Electrical and Electronic Equipment) Directive.

This symbol **(valid only in countries of the European Community)** indicates that the product it applies to must NOT be disposed of together with ordinary domestic or industrial waste but must be sent to a differentiated waste collection system.

The end user is therefore invited to contact the supplier of the device, whether the Parent Company or a retailer, to initiate the collection and disposal process after checking the contractual terms and conditions of sale.

For more information refer to:

http://www.agilent.com/environment/product/index.shtml

5
Technical Description

SECTION I
Technical Description 75
Lubrication 77
Vacuum Seals 77
Gas Ballast Valve 77
Anti-Suckback Device 78
Technical Data 84
Dimensions 87
Safety Precautions 89
Transport and Installation 89
Preliminary Operations 91
SECTION II
Electrical motors 92
Single Phase Universal Motors 92
Single-Phase Universal Motors Voltage Setting 94
Three Phase Universal Motors 96
Electrical Connections of Three-Phase World Wide Motors 97

Original Instructions

Connections to the Inlet and Exhaust Flanges 98
Starting and Running the Pump 99
Stopping the Pump 101
Safety Rules 101
Warning Notes 102
Caution notes 104
Maintenance Actions 105
Lubricants 107
Scheduled Maintenance Cards 112
Troubleshooting and Corrective Action 156
Replacement Parts and Accessories 160

SECTION I

Technical Description

The DS102 1Ph, DS202 1Ph, DS302 1Ph, DS402 1Ph, DS402 3Ph, DS602 1Ph and DS602 3Ph pumps are dual-stage, rotary vane pumps oil sealed, driven by a single-phase or three-phase electric motor.

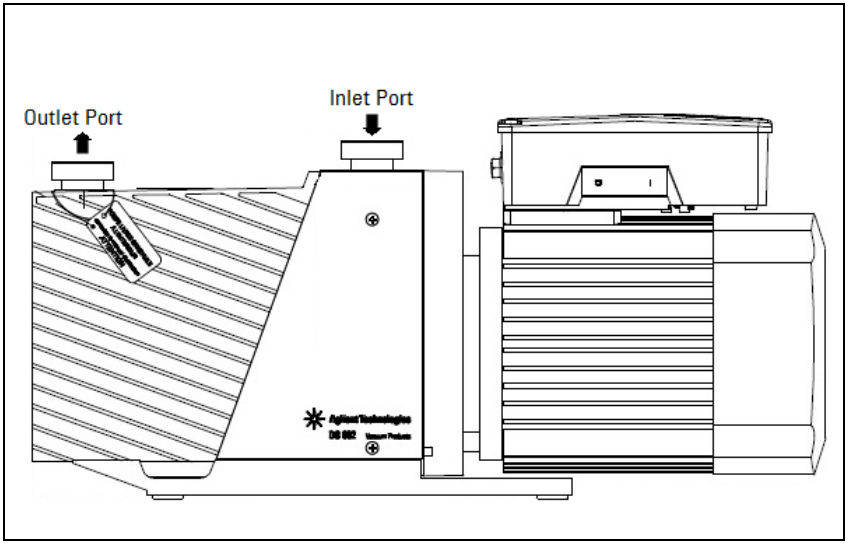

Figure 5

These vacuum pumps are suitable for pumping non corrosive gases.

The main features are:

- all parts in direct contact with the fluid pumped are free of copper alloys;
- all materials are carefully selected to provide extended life;
- a high capacity gas ballast device allow to pump condensable vapors;

- all the parts composing the pump are fully replaceable due to the close machining tolerances and to the centering obtained by using reference pins;
- due to its design features and low number of gaskets, the pump requires little maintenance, disassembly and reassemble are easy and require minimal time.

The pump works with force-feed lubrication, provided by an auxiliary gear-pump driven by the rotor of the vacuum pump itself. This ensures proper lubrication even when pressures are close to atmospheric.

The entire pump functional block is immersed in the oil contained in the casing. The oil guarantees perfect sealing of the discharge valves, enters the pump to ensure lubrication and sealing of the parts inside, facilitates heat dissipation and reduces pump noise.

The pump is equipped with a special anti-suckback device which automatically isolates the vacuum system when the pump stops. This avoids rises in pressure or oil flow in the vacuum system while air is allowed back into the stator chambers.

The air entering the pump after the anti-suckback device has closed prevents the oil in the casing from filling the stator chambers.

The inner seals are achieved by the lubricating oil, thanks to the close machining tolerances.

There is only one oil seal on the rotor shaft, the one preventing oil from seeping out of the pump. This seal acts on a bushing fitted onto the shaft. Simple replacement of this seal grants the rotor a practically unlimited life (pumps DS402 1Ph, DS402 3Ph, DS602 1Ph, DS602 3Ph). On the DS102 1Ph, DS202 1Ph and DS302 1Ph pumps, this seal acts on a surface-hardened area of the shaft guaranteeing long rotor life.

The vacuum pumps are connected directly to the electric motor through a flexible coupling, so that motion is transmitted even in case of poor alignment.

A fan fitted on the joint and housed in the pump support produces a forced air flow over the finned surfaces of the casing to avoid oil overheating.

Lubrication

The pump's lubricating system is force-feed type.

Oil circulation is obtained by means of a gear pump connected to the rotor shaft.

The oil is drawn through a gauze filter to prevent any foreign bodies from entering the pump.

Shunt-mounted on the delivery line is a hydraulic piston which, besides actuating the anti-suckback device (see ANTI-SUCKBACK DEVICE), also regulates pressure by discharging excess oil flow directly into the tank.

The required flow of oil under pressure passes through ducts that are drilled in the walls of the pump and lubricates the bushings and the inside parts.

Vacuum Seals

A special feature of this pump is the low number of gaskets that are employed.

The seals in the circuit are obtained by means of VITON gaskets.

The careful surface finish of the various parts of the pump means that vacuum sealing of the functional block is ensured by the film of oil separating metal surfaces. Sealing of the rotor shaft is guaranteed by a rotating gasket with dust-guard lip.

The suction flange and duct are sealed by mean of OR gaskets.

Gas Ballast Valve

When the pump sucks in vapors, these condense during compression and mix with the oil, forming an emulsion (an aqueous vapor, for example) or a solution (organic solvent vapors, for example).

A number of problems arise from this, such as the impossibility of obtaining high vacuums, the alteration of the properties of the oil, could cause scaling on parts of the pump.

To avoid this, during compression at the second stage, atmospheric air is let into the pump through an adjustable valve, or “gas ballast valve”, located at the top of the pump.

In this way, the discharge valve of the second stage opens through the effect of the atmospheric air before the partial pressure of the vapor reaches saturation point, thus preventing condensation from occurring. The vapors are expelled mixed with air.

Anti-Suckback Device

The pump is equipped with a special anti-suckback device to avoid air pressure rises and/or oil backflow towards the evacuated vessel when the pump is switched off. This device has a shutter which automatically closes the suction duct.

In this way the pump and vacuum system are completely isolated from each other and air can enter the pump without any risk for the vacuum produced in the system.

The device includes some special features, namely:

- drive obtained avoiding any form of contamination of the inlet duct by fluids (oil and/or air) used to command the shutter. Thanks to this, when the pump is started again, the pumpdown to vacuum conditions is extremely fast as these contaminants are not present and no degassing is therefore required;
- suction flange maintained closed even when the pump is idle, so that pollutants cannot enter from the environment and no oil can overflow from the pump.

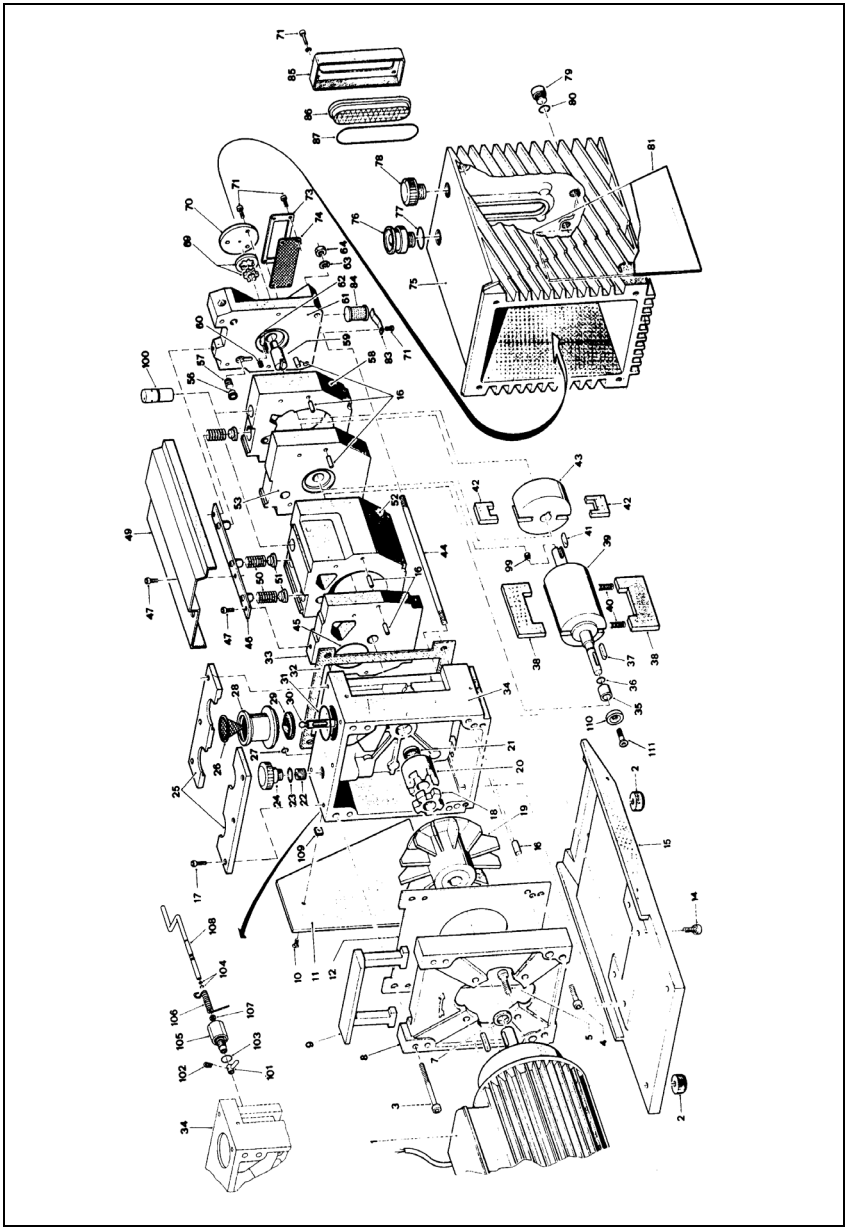

Figure 6 View of the pump

Tab. 2

N°	DESCRIPTION	DS 102	DS202	DS302	DS402	DS602
1	Electric motor	SR03700702	SR03700702	SR03700702	SR03700703	SR03700703
1A	Electric motor 370-450W	SR03700865	SR03700865	SR03700865		
1B	Three phase electric motor	SR03700922	SR03700922	SR03700922	SR03700704	SR03700704
2	Rubber foot					
3	Screw					
4	Screw					
5	Screw					
7	Spacer					
8	Motor support					
9	Handle					
10	Screw					
11	Right sideplate					
12	Board					
14	Screw					
15	Support plate					
16	Cylindrical pin	(4) - (1)	(4) - (2)	(4) - (2)	(5) - (3)	(5) - (3)
17	Screw					
18	Rubber crown	(4) - (1)	(4) - (2)	(4) - (2)	(5) - (3)	(5) - (3)
19	Half-joint with fan					
20	Half-joint (pump side)					
21	Oil-seal ring	(4) - (1)	(4) - (2)	(4) - (2)	(5) - (3)	(5) - (3)
22	Special screw					
23	OR gasket	(4) - (1)	(4) - (2)	(4) - (2)	(5) - (3)	(5) - (3)
24	Gas Ballast Valve knob	SR03700219	SR03700219	SR03700219	SR03700219	SR03700219
25	Half-plate					

N°	DESCRIPTION	DS 102	DS202	DS302	DS402	DS602
26	Inlet screen	SR03700237	SR03700237	SR03700237	SR03700237	SR03700237
27	OR gasket	(4) - (1)	(4) - (2)	(4) - (2)	(5) - (3)	(5) - (3)
28	Suction flange					
29	Anti-suckback shutter	(4) - (1)	(4) - (2)	(4) - (2)	(5) - (3)	(5) - (3)
30	Piston					
31	OR gasket	(4) - (1)	(4) - (2)	(4) - (2)	(5) - (3)	(5) - (3)
32	Casing gasket	(4) - (1)	(4) - (2)	(4) - (2)	(5) - (3)	(5) - (3)
33	Inner plate	SR03700260	SR03700260	SR03700260	SR03700362	SR03700362
34	Pump support					
35	Anti-wear bushing				SR03700370	SR03700370
36	OR gasket	(4) - (1)	(4) - (2)	(4) - (2)	(5) - (3)	(5) - (3)
37	Kei motor side	SR8999980101	SR8999980101	SR8999980101	SR8999980301	SR8999980301
38	First stage vane	(1)	(2)	(2)	(3)	(3)
39	First stage rotor	SR03700273	SR03700319	SR03700319	SR03700371	SR03700371
40	Spring	(4) - (1)	(4) - (2)	(4) - (2)	(5) - (3)	(5) - (3)
41	Tongue	SR8999980001	SR8999980001	SR8999980001	SR8999980401	SR8999980401
42	Second stage vane	(1)	(2)	(2)	(3)	(3)
43	Second stage rotor	SR03700269	SR03700269	SR03700269	SR03700367	SR03700367
44	Tie-rod	SR03700209	SR03700308	SR03700308	SR03700335	SR03700335
45	OR gasket	(4) - (1)	(4) - (2)	(4) - (2)	(5) - (3)	(5) - (3)
46	Bracket					
47	Screw					
49	Valve cover plate					
50	Valve spring	(4) - (1)	(4) - (2)	(4) - (2)	(5) - (3)	(5) - (3)

N°	DESCRIPTION	DS 102	DS202	DS302	DS402	DS602
51	Valve gasket	(4) - (1)	(4) - (2)	(4) - (2)	(5) - (3)	(5) - (3)
52	First stage stator	SR03700261	SR03700316	SR03700495	SR03700363	SR03700419
53	Middle plate	SR03700262	SR03700262	SR03700262	SR03700421	SR03700421
56	GasBallast Valve shutter	(4) - (1)	(4) - (2)	(4) - (2)	(5) - (3)	(5) - (3)
57	GasBallast Valve spring	(4) - (1)	(4) - (2)	(4) - (2)	(5) - (3)	(5) - (3)
58	Second stage stator	SR03700321	SR03700321	SR03700321	SR03700364	SR03700364
59	Oil pump joint	SR03700280	SR03700280	SR03700280	SR03700390	SR03700390
60	Special screw					
61	End plate	SR03700285	SR03700285	SR03700285	SR03700391	SR03700391
62	Tongue					
63	Washer					
64	Nut					
69A	External oil pump gear	SR03700281	SR03700281	SR03700281	SR03700281	SR03700281
69B	Internal oil pump gear	SR03700277	SR03700277	SR03700277	SR03700277	SR03700277
70	Oil pump cover					
71	Screw					
73	Plate					
74	Filter					
75	Casing					
76	Exhaust flange					
77	OR gasket	(4) - (1)	(4) - (2)	(4) - (2)	(5) - (3)	(5) - (3)
78	Oil fill plug	03.701218	03.701218	03.701218	03.701218	03.701218
79	Oil drain plug	SR03700256	SR03700256	SR03700256	X3700-60017	X3700-60017
80	Oil drain plug gasket	SR03700256	SR03700256	SR03700256	X3700-60017	X3700-60017
81	Left sideplate					

N°	DESCRIPTION	DS 102	DS202	DS302	DS402	DS602
83	Spring					
84	Filter					
85	Flange					
86	Sight glass	03.701326	03.701326	03.701326	03.701326	03.701326
87	OR gasket	(4) - (1)	(4) - (2)	(4) - (2)	(5) - (3)	(5) - (3)
99	Special screw					
100	Piston					
101	Arm					
102	Spring	(1)	(2)	(2)	(3)	(3)
103	OR gasket	(4) - (1)	(4) - (2)	(4) - (2)	(5) - (3)	(5) - (3)
104	OR gasket	(4) - (1)	(4) - (2)	(4) - (2)	(5) - (3)	(5) - (3)
105	Sleeve					
106	Spring	(1)	(2)	(2)	(3)	(3)
107	Ring	(4) - (1)	(4) - (2)	(4) - (2)	(5) - (3)	(5) - (3)
108	Arm					
109	Insert					
110	Special washer					
111	Screw					

NOTES

Tab. 3

1	Part of DS 102 Major Maintenance Kit (P/N 9499380)
2	Part of DS 202-302 Major Maintenance Kit (P/N9499381)
3	Part of DS 402-602 Major Maintenance Kit (P/N 9499382)
4	Part of DS 102-202-302 Minor Maintenance Kit (P/N 9499370)
5	Part of DS 402-602 Minor Maintenance Kit (P/N 9499371)

Technical Data

The following table lists the main technical data of the DS102 1Ph, DS202 1Ph, DS302 1Ph, DS402 1Ph, DS402 3Ph, DS602 1Ph and DS602 3Ph pumps.

Tab. 4

TECHNICAL DATA	Hz	UNITS	DS102	DS202	DS302	DS402	DS602
FREE AIR DISPLACEMENT	60	l/min (cfm)	114 (4)	192 (6,8)	285 (10)	410 (14,5)	605 (21,4)
	50	l/min (m^3/h)	95 (5,7)	160 (9,6)	237 (14,2)	342 (20,5)	540 (30,2)
PUMPING SPEED*	60	cfm	3,5	5,8	8,2	12,3	18,3
	50	m^3/h	5	8,3	11,6	17,4	26
ULTIMATE PARTIAL PRESSURE*		mbar	10^{-4}	10^{-4}	10^{-4}	10^{-4}	10^{-4}
ULTIMATE TOTAL PRESSURE*		mbar	$2 \cdot 10^{-3}$	$2 \cdot 10^{-3}$	$2 \cdot 10^{-3}$	$2 \cdot 10^{-3}$	$2 \cdot 10^{-3}$
ULTIMATE TOTAL PRESSURE WITH GAS BALLAST*		mbar	$2 \cdot 10^{-2}$	$2 \cdot 10^{-2}$	$2 \cdot 10^{-2}$	$1 \cdot 10^{-2}$	$1 \cdot 10^{-2}$
WATER VAPOR TOLERANCE		mbar	15	15	20	30	30
WATER VAPOR CAPACITY		g/h	60	100	160	350	550
OIL CAPACITY min/max		l	0,3/0,5	0,4/0,6	0,4/0,6	0,6/1	0,6/1
MOTOR RATING 1ph	50/ 60	kW	0.72	0.72	0.72	1.1	1.1

MOTOR RATING Vac 3 ~		kW					
Y 380-415	50					0.6	0.6
Y 460	60					0.5	0.5
Δ 200-230	50					0.5	0.5
Δ 200-230	60					0.3	0.3
NOMINAL ROTATION SPEED	50	rpm	1500	1500	1500	1500	1500
	60	rpm	1800	1800	1800	1800	1800
OIL TEMPERATURE		°C	50	50	52	70	72
(pump operating)**		°F	122	122	126	158	162
Internal use Only							
Max Altitude 2000m							
Installation category	II						
Pollution degree	2						
OPERATING TEMPERATURE RANGE		°C	12 - 40	12 - 40	12 - 40	12 - 40	12 - 40
WEIGHT		Kg	22	24	24	36	36
		lb	48	53	53	79	79
INLET FLANGE		DN	25KF	25KF	25KF	25KF	25KF
EXHAUST FLANGE		DN	25KF	25KF	25KF	25KF	25KF
Dimensions (cf. also next table):							
- length, 1ph		mm	454	491	491	530	530
- width		mm	134	134	134	164	164
- height		mm	212	212	212	242	242
Input single phase versions ***							
Nominal voltages:	50	V	100 / 200-230	100 / 200-230	100 / 200-230	100 / 200-230	100 / 200-230

	60	V	100-120 200-230	100-120 200-230	100-120 200-230	100-120 200-230	100-120 200-230
Maximum currents:	50	A	8,8 5,4	8,8 5,4	8,8 5,4	11,8 6,2	11,8 6,2
	60	A	8,8 4,4	8,8 4,4	8,8 4,4	12,8 6,4	1,8 6,4

* According to PNEUROP 6602

** At ultimate total pressure, 20 °C (68 °F) room temperature

*** For more details about the electrical motors see pages from 17 to 20

Dimensions

Tab. 5

MODEL	UNITS	A	B	C	D	H	L	M	N	P	R	W
DS102	mm	30	30	35	3	212	430	250	100	105	165	132
	inch	1,18	1,18	1,38	0,12	8,3	16,9	9,8	3,9	4,1	6,5	5,2
DS202	mm	30	30	35	3	212	467	250	100	105	205	132
	inch	1,18	1,18	1,38	0,12	8,3	18,4	9,8	3,9	4,1	8,1	5,2
DS302	mm	30	30	35	3	212	467	250	100	105	205	132
	inch	1,18	1,18	1,38	0,12	8,3	18,4	9,8	3,9	4,1	8,1	5,2
DS402	mm	40	40	40	6	242	541	261	130	100	230	164
	inch	1,57	1,57	1,57	0,24	9,5	21,3	10,3	5,1	3,9	9,1	6,5
DS602	mm	40	40	40	6	242	541	261	130	100	230	164
	inch	1,57	1,57	1,57	0,24	9,5	21,3	10,3	5,1	3,9	9,1	6,5

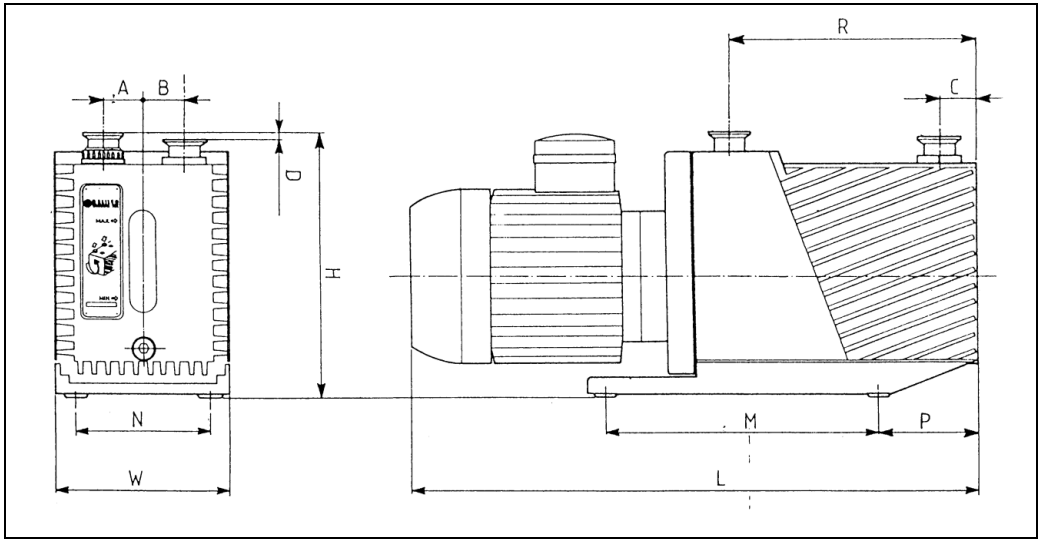

Figure 7 Pump dimensions

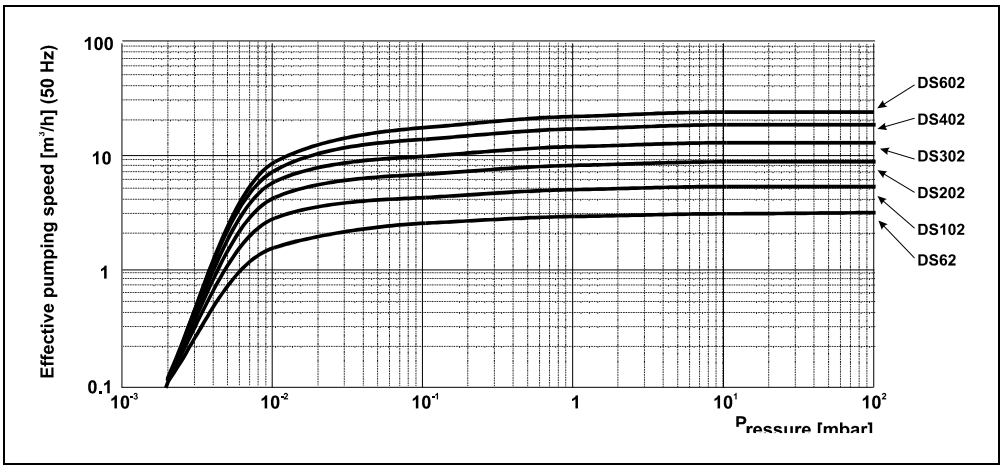

Figure 8 Typical Performance Curves

Safety Precautions

- Always carry the pump by means of the handles provided.
- The pump must be set in position taking the upmost care in order to avoid accidental falls.

WARNING! **In case of a need to handle the pump after a period of operation, it must be left to cool first as the external surface temperature may be in excess of 60 °C.**

Transport and Installation

The pumps are shipped to the customer inside cardboard boxes.

Total weight of the pack, including the pump, is between 30 Kg. and 40 Kg. according to the different pump models.

The case must be handled with care, using appropriate lifting equipment.

CAUTION! When moving the case, ensure that it is securely bound to the lifting equipment and that the equipment is strong enough to support the weight.

The pump's working environment is a traditional industrial environment. Naturally sites with corrosive vapors or excessive heat are best avoided.

Room temperature should ideally be between 12 °C and 40 °C.

If the temperature is not inside this range, consult Agilent technical service for the changes required.

Setting the pump in position should be performed as follows:

- Pump laid on the ground. There are no special instructions for this type of installation, except that the floor should be as flat as possible and suited to bear the weight of the pump (it should ideally be a concrete floor) and of any accessories mounted on it. Note that the pump is stable on its base plate and it should not be necessary to anchor it to the floor with bolts and screws; also vibrations to and from the pump are greatly reduced by the use of rubber feet.
- Pump off the ground. In this case, the user must design a suitable support structure, remembering the following points:
  - the plane supporting the pump must be perfectly horizontal;
  - the structure should be adequately rigid;
  - the relevant safety precautions should be applied.
- Note also that the pump should be attached to the supporting structure after replacing the rubber feet with special anti-vibration feet, which should be screwed to the pump base and to the supporting plane.

After taking the pump out of its packing case, you are advised to make the following checks:

Ensure that the pump has not suffered any damage during shipping.

Check that the guards are mounted correctly (side plates, refs. 11 and 81 in fig. *View of the pump*) and that there are no uncovered or loose parts.

Preliminary Operations

Before starting the pump, fill up with lubricating oil as the pumps are delivered empty.

NOTE A tin of oil is included in the packing.

For details on how to fill up, see Scheduled Maintenance Card 01.

CAUTION! Oil must be poured into the casing through the special threaded plughole and NOT through the suction line.

WARNING! **Take out the protective caps on the suction and exhaust flanges before doing anything else. In the event of an accidental start-up, the air inside the pump could violently expel the protective caps and harm the operator.**

SECTION II

Electrical motors

Single Phase Universal Motors

They are world wide motors, dual voltages and dual frequencies, and they are in accordance with major international standards (UL, CSA, CE). On the table below are shown the technical specifications of the different motors.

CAUTION! Before connecting to the mains, check the position of the voltage selector situated inside the electrical box (see next paragraph).

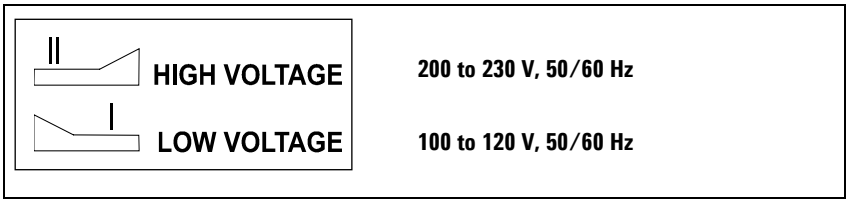

Figure 9 Voltage selector

The motor has a main on/off bipolar switch.

The motor includes a thermal protection against overloads. If the motor is switched off by this relay, it can be started again after a few minutes.

Consult the trouble shooting section in order to understand and remove the overload cause.

NOTE Fuses installed as part of the building installation must be in accordance with the table below.

If you start a pump at low temperature, the current absorbed by the motors will be for several seconds higher than the nominal one, for this reason the fuse on the line must be of the slow-blow type.

Tab. 6

PUMP	NOMINAL VOLTAGE [V]	HZ	RPM	KW	START UP CURRENT [A]	FULL LOAD CURRENT [A]	MAXIMUM FUSE RATING [A]
DS 102 DS 202 DS 302	100	50	1450	0.45	44	8.8	10
	100 to 120	60	1730	0.55	42	8.8	10
	200 to 230	50	1450	0.45	27	5.4	8
	200 to 230	60	1730	0.55	24	4.4	6
DS 402 DS 602	100	50	1450	0.75	75	11.8	16
	100 to 120	60	1730	0.90	82	12.8	16
	200 to 230	50	1450	0.75	43	6.2	8
	200 to 230	60	1730	0.90	39	6.4	8

Single-Phase Universal Motors Voltage Setting

CAUTION! Before connecting to the mains, check that your electrical mains voltage corresponds to the motor voltage setting.

WARNING! **Disconnect the motor from the mains before opening the electrical box.**

The motors are factory set to operate at 200-230 V (50/60 Hz) nominal voltages.

To modify the voltage setting, change the position of the voltage selector situated inside the motor electrical box.

To confirm the change of the voltage setting from High Voltage to Low Voltage, glow the orange label above the yellow label positioned on the electrical box cover.

WARNING! **Close the motor electrical box cover before connecting to the main.**

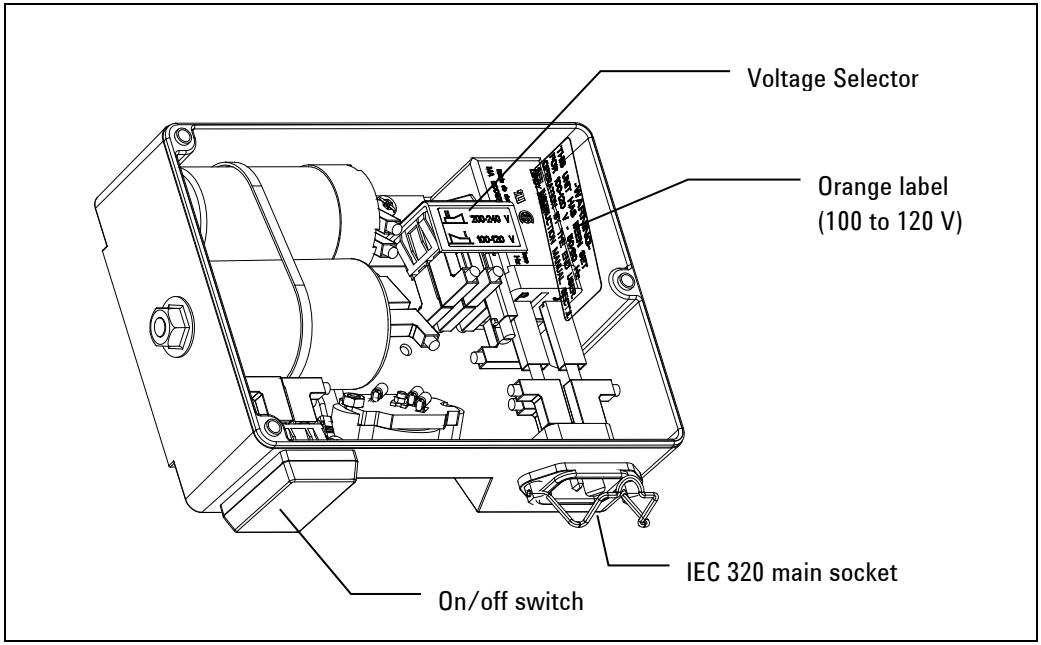

Figure 10 Motor Electrical box

Three Phase Universal Motors

They are world wide motors in accordance with major international standards (UL, CSA, CE). On the table below are shown the technical specifications of the different motors.

CAUTION! Before starting the pump, give a short activation to the power switch, in order to check that the motor turns in the direction indicated by the arrow on the motor body. Should it rotate in the opposite direction, invert the connection of any two phases on the motor terminals.

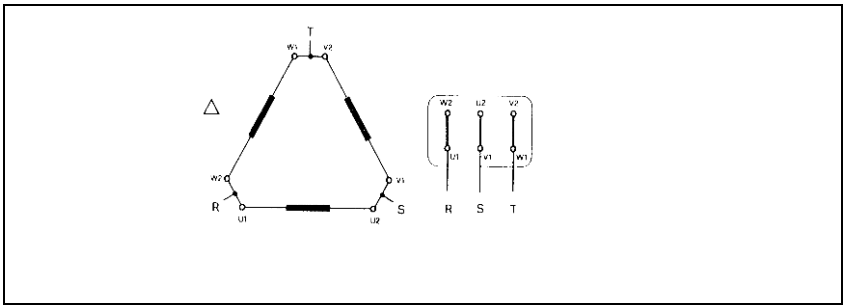

Figure 11 LOW VOLTAGE CONNECTION for power supply of 220V to 230 V 50 - 60 Hz DELTA CONNECTION

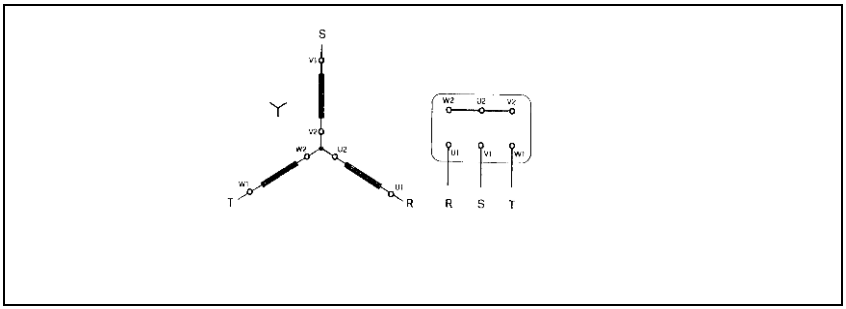

Figure 12 HIGH VOLTAGE CONNECTION for power supply 380V to 460V 50 - 60 Hz STAR CONNECTION

Electrical Connections of Three-Phase World Wide Motors

DS302 Power supply cord: The correct cable for electrical wiring is a four wires (R+S+T+Earth) cable. The wire section has to be at least 0.8 mm^2 (AWG18) 105°C AWG18.

DS402, DS602 Power supply cord: The correct cable for electrical wiring is a four wires (R+S+T+Earth) cable. The wire section has to be at least 1.6 mm^2 (AWG14) 105°C AWG14.

To connect the motor to the three-phase mains, follow the wiring diagram on the motor plate or on the inside of the terminal strip.

Install a multipolar switch on the power line, with contact spacing of at least 3 mm. A magneto-thermal switch must be installed downstream of this switch, tripping at 130-140 % of the nominal current Type C.

Tab. 7

CONNECTION	FREQ. [HZ]	NOMINAL VOLTAGES [V]	POWER [KW]	START UP CURRENT [A]	CURRENT [A]	MAX FUSE RATING [A]
STAR	50	380 to 415	0.75	15	2.6	4
STAR	60	460	0.90	14	2.4	4
DELTA	50	200 to 230	0.75	26	4.4	6
DELTA	60	200 to 230	0.90	21	4.8	6

CAUTION! It is recommended to connect the pump to the power supply through a dedicated switch on the main electrical panel of the installation, or in proximity of the power supply connection point the circuit breaker has to be type C.

CAUTION! In order to easily identify which disconnecting device related is used for the DS Pump, the Circuit Breaker must to be marked to Marked.

CAUTION! Only electrically trained staff may install the 3Ph models and may change the connection from STAR to DELTA or from DELTA to STAR.

Before starting the pump, give a short activation to the power switch, in order to check that the motor turns in the direction indicated by the arrow on the motor body. Should it rotate in the opposite direction, invert the connection of any two phases on the motor terminals.

One of the most effective method to verify the rotational way of the motor, it is to start the pump with a sheet of paper on the pump inlet. If the paper is sucked by the pump then the motor runs in the right way.

Connections to the Inlet and Exhaust Flanges

Remove the protective caps from both flanges. Remove protective cap from inlet flange. Remove metallic cap and rubber membrane from exhaust flange as explained in the Installation chapter. Connect the system to be evacuated to the inlet flange, using a centering ring with OR and a locking collar.

NOTE For guaranteed reliable sealing, use an OR gasket in Perbunan or Viton.

The inlet duct is equipped with a sieve filter preventing solid particles from entering and damaging the pump.

NOTE When the gases to be pumped out contain dust, it is advisable to insert a dust filter before the inlet flange.

NOTE When the gases to be pumped out contain large quantities of vapor, it is advisable to include a condense separator before the inlet flange.

To make best use of the pump's capacity, use only short, straight piping, with a diameter not smaller than that of the inlet flange.

NOTE If rigid piping is used, it is good practice to use a flexible joint in order to avoid undue forcing of the connection on the pump.

The exhaust duct must be connected to a pipe that will take away the pumped out gases.

NOTE Application of an oil trap filter is necessary to avoid pollution of the surrounding atmosphere by the oil present in the exhaust duct during pump operation.

CAUTION! Never block the pump exhaust line. This would cause overpressure in the casing with the risk of breaking the glass window of the level indicator and/or expelling the oil seal gasket.

Starting and Running the Pump

Before being put into service, in order to reach maximum vacuum, the pump must be left running for about an hour with the gas ballast valve open. This will eliminate any humidity from the oil.

WARNING! **The pump is designed for operation with neutral or non-corrosive fluids. It is absolutely forbidden to use potentially explosive or flammable substances.**

NOTE If the pump is started with cold oil, initially more than normal noise will be heard; this will last for a few minutes only until the oil reaches its working temperature.

There are no special instructions for normal operation of the pump, which is delivered to you after completion of a running-in cycle in the factory. The maintenance operations for a pump in working condition may be found on the Scheduled Maintenance Cards.

If the pump is sucking in environments with liquids or vapors, it is important to leave it to run with the gas ballast open so as to avoid condensation of the vapors and contamination of the lubricating oil as a result. When there is no danger of the oil being contaminated, the gas ballast valve should be closed to reduce the pump's power absorption.

The gas ballast valve will prove useful in the cold season when, due to the lower room temperatures, it takes longer for the pump to reach rated temperature when switched on. Compression of the air forced in by the gas ballast valve develops heat, which in turn increases temperature of the oil faster.

NOTE If gases without vapors are sucked in, you are advised to open the gas ballast device from time to time in order to eliminate the traces of humidity they contain.

NOTE For repetitive work cycles, with brief time intervals in between, it is better not to stop the pump.

Stopping the Pump

There are no special procedures for switching the pump off; it needs only to be disconnected from the electric power by means of the bipolar switch (version with single-phase motor - see section MODELS WITH SINGLE-PHASE UNIVERSAL MOTORS) or of the multipolar switch (version with three-phase motor - see section MODELS WITH THREE-PHASE UNIVERSAL MOTORS).

When the pump is stopped, the anti-suckback device makes it possible to maintain vacuum in the vessel connected on the inlet flange of the pump.

If the pump is expected to be stopped for a lengthy period, or in any case if it has pumped in large amounts of vapors, it is good practice to run it with the gas ballast open and the inlet line closed for a few minutes before switching off in order to limit the risk of corrosion or scaling due to pollution of the oil by condensed vapors.

Safety Rules

Personnel responsible for pump operation and maintenance must be well-trained and must be aware of the accident prevention rules.

The accident prevention precautions contained in this section must be respected at all times during operation and maintenance of the pump to avoid damage to operators and to the pump.

These precautions are provided in the form of WARNING and CAUTION notes.

WARNING! **Operating procedures, technical information and precautions which, if not respected and/or implemented correctly may cause body harm to operators.**

CAUTION! Operating procedures, technical information and precautions which, if not respected and/or implemented correctly may cause damage to the pump.

Warning Notes

a Death may result from contact with high voltages. Always take extreme care and observe the accident prevention regulations in force.

b Always disconnect the power supply to the pump before maintenance work. Place a special warning signs over the power supply breaker switch: MACHINE UNDERGOING MAINTENANCE - DO NOT POWER ON.

c If you are performing maintenance after the pump has been operating for a considerable time, allow sufficient time for it to cool as the external surface temperature may be in excess of 60 °C.

d Failure to provide the pump with an earth connection may cause serious damage to operators. Always ensure that there is an earth connection and that it complies with the standards.

e When cleaning the pump and its component parts, avoid the use of flammable or toxic solvents, such as benzin, benzol, ether or alcohol. The recommendation is to use a soap and water solution, preferably in ultrasound washing machines, taking care to dry all the cleaned parts at temperatures under 100 °C in order to eliminate residual moisture.

f Prolonged overloads or breakdowns may cause the electric motor to overheat, and to release noxious smoke; remove the power immediately as a precaution and do not approach the pump at least until you have provided ventilation to drive out the smoke. Take care not to breathe in the fumes remaining inside the pump in the course of repair work.

g In case of fire, do not throw water on the pump. Switch the power off and use CO2 extinguishers.

h Carefully inspect the flanges to ensure that there are no dust, oil, dirt or defects of the mating surfaces, before making the required connections.

i Ensure that all joints and couplings are locked correctly before starting the pump again after repair work.

j Do not wear any objects that may become entangled in the mechanisms and/or act as conductors (chains, bracelets, etc.).

k Ensure that the tools to be used are in perfect working condition and have insulating grips, where necessary. Check that the insulating material of the cables and that the conductors of the test equipment do not show any signs of damage.

l Do not replace the oil immediately after stopping the machine as the oil may still be at high temperature.

m Perform repairs in clean and, where possible, dust-free areas. Protect all the clearances of connection points with suitable plastic caps and cover the machined surface areas of all parts stripped down until they are put back on the pump again.

n Do not start the pump if the protective sideplates (refs. 11 and 81 of fig. View of the pump) are not properly in place.

Caution notes

a Before putting the pump back into operation after a breakdown, inspect it and check carefully for any other signs of damage.

b Before putting the pump back into operation after a breakdown, inspect it and check carefully for any other signs of damage.

c Use only tools that are in perfect working order and specially designed for the job; use of inappropriate or ineffective tools may cause serious damage.

d Perform repairs in clean and, where possible, dust-free areas. Protect all the clearances of connection points with suitable plastic caps and cover the machined surface areas of all parts stripped down until they are put back on the pump again.

e Always check the lubricant and that it is properly distributed through the pump; inadequate lubrication may damage the pump seriously.

f Give the parts some form of marking as you strip them down to ensure that you reassemble them again in the proper order.

g Check that there are no scratches or grooves on the machined shafts, in their seats inside the pump or on machine-ground surfaces. Slight scratches and abrasions may be eliminated with very fine emery paper or by a little light grinding.

h Before putting a group together, always spread a little oil over inner parts and mating surfaces. Replace all seals with original spare parts before reassembling components.

Maintenance Actions

Maintenance may be seen as the totality of all scheduled and unscheduled maintenance work.

Maintenance includes:

1 **SCHEDULED MAINTENANCE: Maintaining the nominal state of operation.**

2 **UNSCHEDULED MAINTENANCE: Restoring the nominal state of operation**

NOTE The frequency with which repairs are performed depends on the process and presence of substances that shorten pump life (dust, abrasives, solvents, water, chemically aggressive substances).

The pump must be cleaned at regular intervals of time.

CAUTION! Do not clean with Alcohol the plastic or rubber components of the pump.

Use only the strictly necessary amount of lubricant; an excess of lubricating oil, like when there is none, may sometimes compromise proper operation of the pump.

Only the recommended lubricants, or lubricating oils with similar characteristics and known and experimented quality, should be used.

Oil changes must be made with the oil at a sufficiently high temperature, after leaving the pump to cool for a few minutes following operation.

The drain and filler plugs must not be left open any longer than is strictly necessary.

When performing maintenance, look out for all signals that may precede a breakdown, in particular:

- traces of corrosion;
- oil leaks;

- slack joints or couplings.

Maintenance technicians must:

- be aware of all applicable national directives concerning accident prevention during work on motor-driven pumps and should know how to apply them;
- have read and understood all the sections on “Safety Rules";
- be familiar with the essential design features and operation of the pump;
- know how to use and consult the pump documentation;
- be concerned about proper operation of the pump;
- make a note of any irregularities in operation of the pump and take the necessary action, where appropriate.

Use original spare parts wherever possible and repair a broken part as best as possible on site or send it back to the manufacturer for repairs.

For all problems arising, or to order spare parts, refer to our service department.

Agilent Technologies Italia S.p.A.
Vacuum Products Division
Via F.lli Varian 54 10040 Leini, (Torino) – Italy
Tel.: +39 011 997 9111
Fax: +39 011 997 9350
Toll-Free: 00 800 234 234 00

Lubricants

It will be readily understood how important adequate lubrication is to high technology pumps like the Agilent vacuum pumps. Correct use of appropriate lubricants makes a significant contribution to achieving best performance and warding off defects.

When handling lubricants, the following sanitary protection measures should be observed at all times:

- Avoid prolonged, excessive or repeated contact of the skin with products for lubrication, and also avoid directly inhaling the fumes or vapors of such products.
- Protect the skin by wearing appropriate clothes and equipment (e.g. special suits, glasses or, where permitted by the safety regulations, gloves) or by applying a special protective product.
- Clean the skin carefully after contact with the lubricants by washing freely with water and soap.
- Apply a skin cream after washing.
- Take off and change clothes or shoes on which oil has been spilled.
- Never put rags dripping with oil into the pockets of your clothes.

When disposing of waste lubricants, observe the following environment protection regulations:

- The lubricants risk contaminating the water and the ground! Therefore never pour lubricating products on to the ground, into water or in the sewage system. All violations of these rules are liable to persecution as provided for by law. When using lubricants always keep an oil can nearby.
- Take care in draining off waste oils. In disposal of these products respect all regulations in force concerning waste oil disposal.

The recommended lubricating oil is the Agilent Rotary Vane Fluid AVF Silver formerly called DS19 Type. The Rotary Vane Fluid AVF Silver formerly called DS19 Type is a general purpose mechanical pump fluid specifically engineered to provide superior performance in high speed direct drive mechanical pumps.

These precisely distilled fluids (100 % solvent refined neutral paraffinic oil) deliver lower base pressure capability, faster pump-down cycles, and reduced maintenance requirements on both the pump and the fluid.

It is absolutely necessary to continue using the lubricants initially used to fill the tank. If this is not possible for organizational or business reasons, use only products with the same characteristics as the previous oils.

Only use of lubricants of suitable quality will guarantee safe operation of the pumps.

CAUTION! Mineral oils and the PFPE oil are incompatible. To change from one type to another, the pump must be stripped down completely and all parts washed carefully to eliminate all oil residues.

If you expect to have to use other lubricants, first find out if the two products are compatible. In cases of doubt, the lubricant used up to that time must be flushed out by way of a pump flushing procedure.

CAUTION! To avoid the risk of contaminating the oil, absolute cleanliness of the pump and surrounding area must be ensured during the lubrication procedures.

Tab. 8

PROPERTY	UNIT OF MEASURE	AVF SILVER FORMERLY CALLED DS19 TYPE
Vapor pressure @ 25 °C	Torr	$1 \cdot 10^{-5}$
Boiling point @ 0,01 torr	°C (°F)	112 (233)
Viscosity @ 40 °C	cSt (SUS)	55 (258)
Viscosity @ 100 °C	cSt (SUS)	8,1 (52,7)
Pour point	°C (°F)	-15 (5)
Flash point	°C (°F)	213 (415)
Fire point	°C (°F)	244 (472)
Density @ 25 °C	g/ml	0,87

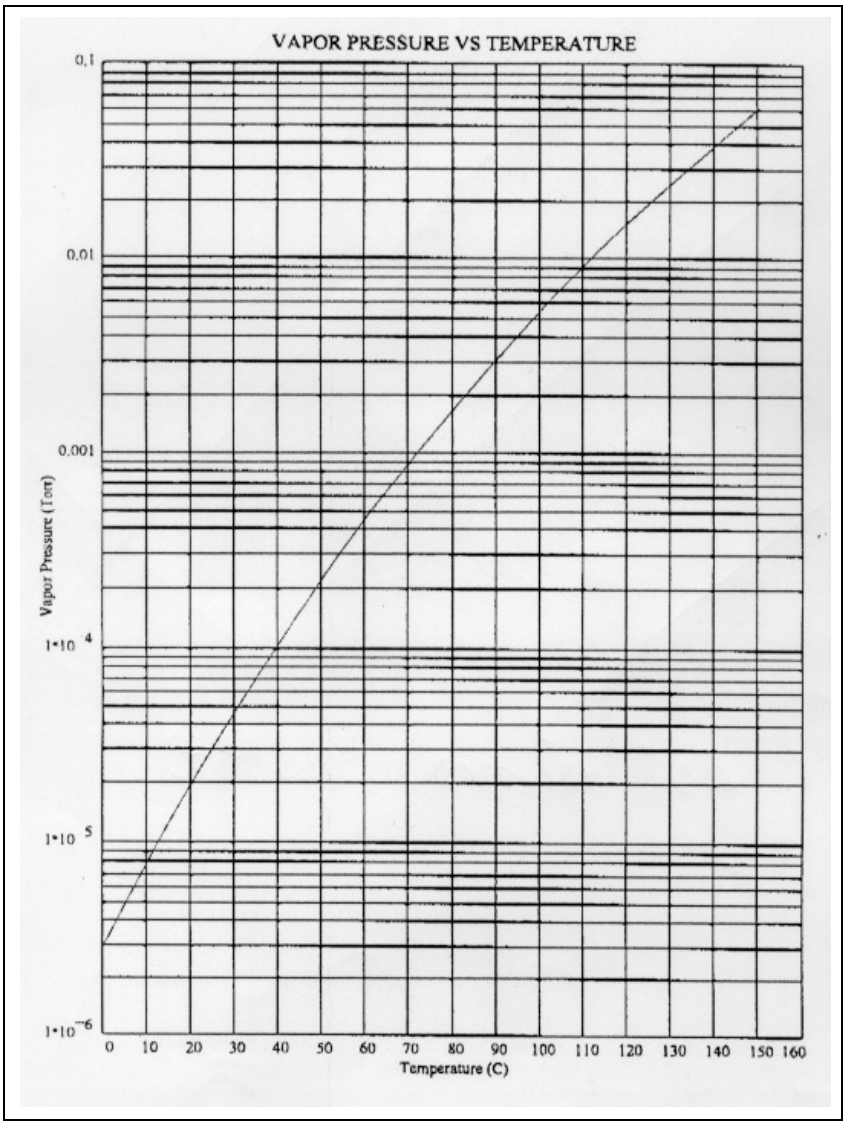

Figure 13 Agilent Rotary Vane Fluid AVF Silver formerly called DS19 Type vapor pressure curve

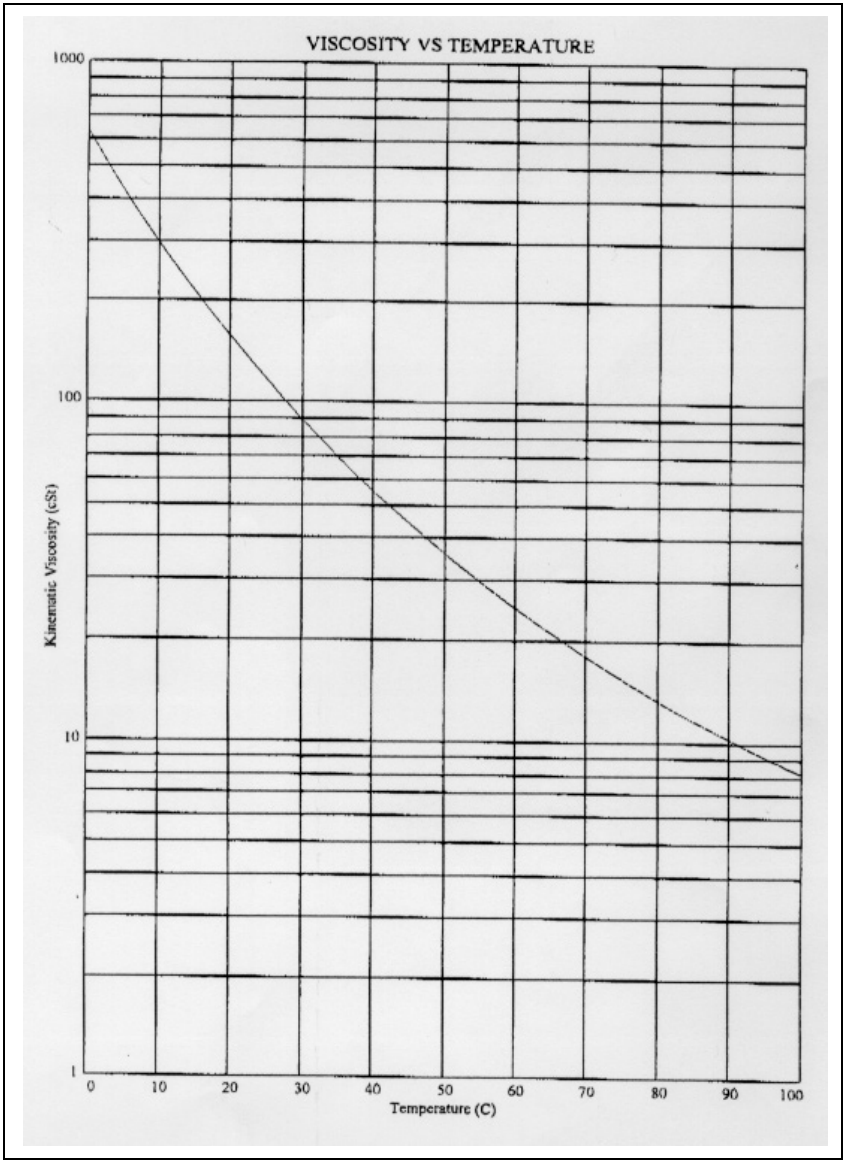

Figure 14 Agilent Rotary Vane Fluid AVF Silver formerly called DS19 Type vapor pressure curve

Scheduled Maintenance Cards

Tab. 9

No.	FREQUENCY	PUMP STATUS (*)	OPERATION
01	MONTHLY	R	OIL LEVEL CHECKING
02	TWICE YEARLY	S	CLEANING THE INLET FILTER

(*) R=RUNNING S=STOPPED

NOTE When the pump is equipped with:

- a filter for dust on the inlet side
- a condensation separator on the inlet side

these items must also be maintained, by following the Manufacturer's instructions.

NOTE The numbers used in the drawings on the Scheduled Maintenance Cards are those used in Figure View of the pump.

	Scheduled Maintenance	Card No. 01
Pump type:	DS102 1Ph, DS202 1Ph, DS302 1Ph, DS402 1Ph, DS402 3Ph, DS602 1Ph, DS602 3Ph	
Frequency: Monthly	**Time:** 5 min	**Machine status:** S R
Type of action:	LUBRICATION	
Item:	LUBRICATING OIL 9499390	

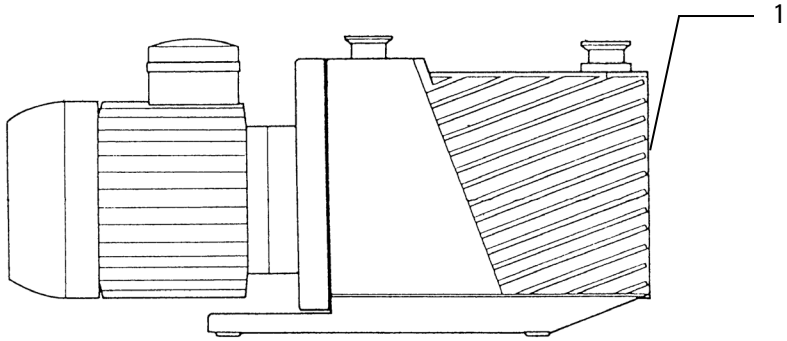

No.	Description	Time	Equipment	Materials
1	Check the oil level and top up if necessary.	5 min	▪ Cleaning rags ▪ Liquid detergent	Oil P/N 9499390

WARNING! **Machine powered: take care on account of moving parts and high voltages.**

WARNING! **If you have to perform maintenance on the pump after a considerable time in operation, leave it to cool as temperature of the outer surface may be in excess of 60 °C.**

1. Check the oil level through the sight glass: there are two clearly visible arrows indicating maximum and minimum levels for proper pump operation.

NOTE The amount of oil consumed depends on the type of work, particularly on the volume being evacuated and on the frequency of the vacuum cycles.

2. If necessary, open the pump filling plug on the top plane of the pump and add oil.

NOTE Before starting the procedure, check that the quality and type of oil used corresponds to the indications of Table Agilent Rotary Vane Fluid AVF Silver formerly called DS19 Type characteristics of this manual.

CAUTION! Take great care to avoid oily residues or dust from entering the pump and jeopardizing proper operation.

3. Close the fill plug and, using cotton or other suitable material rags, clean thoroughly the outer surface of the top plane of the pump.

CAUTION! Never mix lubricants of different brands or quality. To change from one oil to another, the pump must be stripped down and all parts washed carefully, taking care to eliminate oil residues.

4. Open the gas ballast valve to purify the oil.

	Scheduled Maintenance	**Card No. 02**
Pump type:	DS102 1Ph, DS202 1Ph, DS302 1Ph, DS402 1Ph, DS402 3Ph, DS602 1Ph, DS602 3Ph	
Frequency: Twice Yearly	**Time:** 10 min	**Machine status:** S R
Type of action:	CLEANING	
Item:	INLET FILTER	

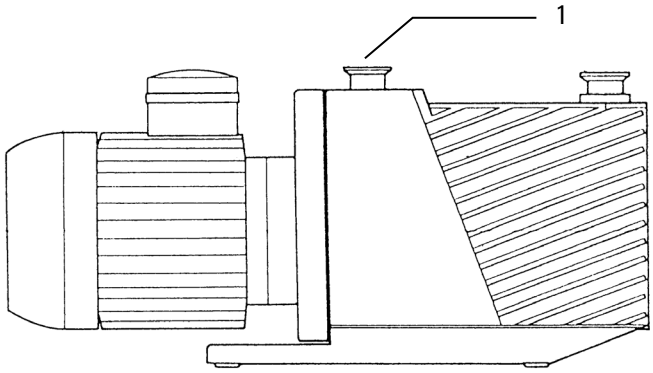

No.	Description	Time	Equipment	Materials
1	Check the oil level and top up if necessary.	10 min	▪ Cleaning rags ▪ Liquid detergent	Oil P/N 9499390

WARNING!

Machine safety: disconnect all power lines. Hang the card "MACHINE UNDERGOING MAINTENANCE - DO NOT POWER ON" from the main breaker switch. When finished, remove the safety warning.

WARNING!

If you have to perform maintenance on the pump after a considerable time in operation, leave it to cool as temperature of the outer surface may be in excess of 60 °C.

1. Remove the filter (26) from the inlet flange (28).
2. Clean the filter using an aqueous solution and dry with hot air.
3. Put the filter back in place.

CAUTION!

The filter element is designed to prevent solid particles in the air from entering the inside of the pump and if it is not working properly, serious damage could be caused the pump's inner parts. In such cases, it may be worthwhile installing a large surface area filter in the pump's suction line to improve effectiveness and reduce maintenance frequency.
If the pump sucks in gases and vapors that contain large quantities of solid particles, the filter must be checked and cleaned more often than indicated here.

Tab. 10 UNSCHEDULED MAINTENANCE CARDS

No.	SUBJECT	FREQUENCY
101	General Warnings	
102	Changing the oil	Whenever necessary (see NOTE)
103	Disassembly of oil level indicator	When damaged
104	Disassembly of anti-suckback device shutter	When damaged
105	Disassembly of electric motor and joint	When damaged
106	Disassembly of discharge valve	When damaged
107	Disassembly of oil circulating pump	When damaged
108	Disassembly of anti-suckback valve	When damaged
109	Disassembly of pump body	When damaged
110	Replacement of oil seal ring/wear bushing	When damaged
111	Disassembly of functional block rotors	When damaged

NOTE Normally oil is clear and transparent. If the oil darkens, it should be changed. As best practice, in case of 24/7 operation, we suggest to change the oil every 4500 hr (6 month).

NOTE The numbers used in the drawings on the Unscheduled Maintenance Cards are those used in Figure View of the pump.

	Unscheduled Maintenance	Card No. 101
Pump type:	DS102 1Ph, DS202 1Ph, DS302 1Ph, DS402 1Ph, DS402 3Ph, DS602 1Ph, DS602 3Ph	
Frequency: Twice Yearly	**Time:** 10 min	**Machine status:**
Type of action:	GENERAL WARNINGS	
Item:		

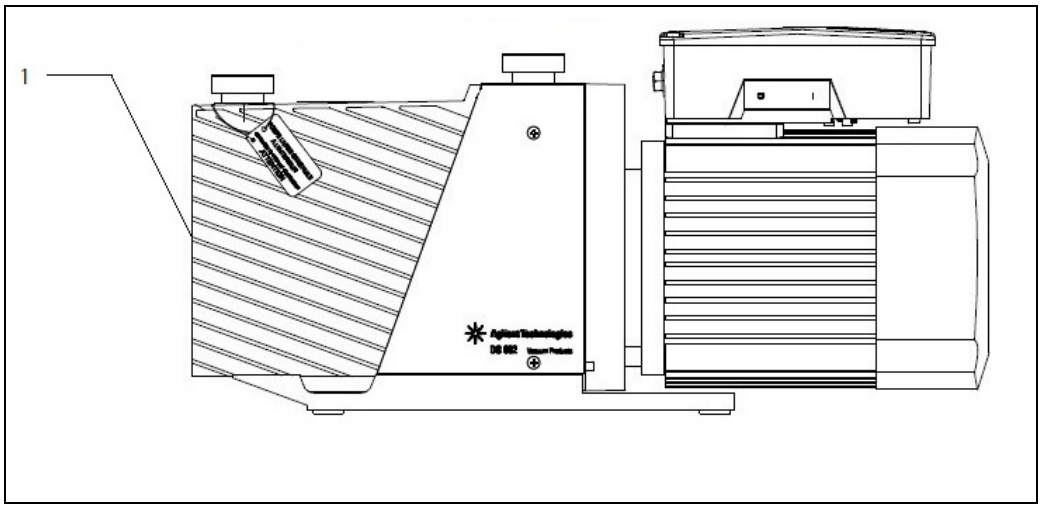

1. Pump disassembly and reassembly require some basic operations and use of tools found in most workshops.

NOTE

The pump's component parts are modular and therefore fully interchangeable. Whenever parts have to replaced, please specify in the order:

Pump type

Serial number (marked on pump identification plate).

Reference number on the detailed diagram, name and part number as indicated on the spare parts and accessories list (section SPARE PARTS LIST of this manual).

To simplify maintenance work, two kits have been devised.
The Gaskets Kit, containing all the gaskets recommended for substitution after disassembly of the pump and the most commonly used removable parts.

You are advised to keep this kit in a dry room, away from heat and light (sun and UV rays) in order to prevent hardening of the elastomer parts.

The Maintenance Kit, including, as well as the Gaskets Kit, the 1st and 2nd stage vanes and other parts that it may be necessary to replace when overhauling the pump completely. These parts have a life of approx. two years under conditions of normal operation.

Tab. 11

KIT	Pump Type					ORDER CODE
	DS102 1Ph	DS202 1Ph	DS302 1Ph	DS402 1Ph DS402 3Ph	DS602 1Ph DS602 3Ph	
GASKETS KIT	X	X	X			9499370
GASKETS KIT				X	X	9499371
MAINTENANCE KIT	X					9499380
MAINTENANCE KIT		X	X			9499381
MAINTENANCE KIT				X	X	9499382
GASKETS KIT	X	X	X			9499370

2. Before reassembling the pump, all parts must be cleaned thoroughly with a soap and water solution and rinsed with demineralized water.

CAUTION! Particular care must be taken in cleaning the lubrication ducts and oil passage nozzles, which must always be kept free of impurities.

CAUTION! Take care that the soap and water solution does not remain in the various cavities and recesses of the pump, in the blind holes in particular.

3. Then dry the parts, by heating where possible but without using compressed air (it generally contains polluting substances), taking care not to exceed a temperature of 80 °C.
4. The sequence of reassembly is the inverse of the disassembly operation. Take the same precautions:

- Spread some clean oil of the same type as used to lubricate the pump over the different parts, in particular the inner lip of the oil seal, the bushings and vanes.
- If the oil seal has the dust-block lip, 2/3 fill the area between the two lips with ISOFLEX TOPAS NB5051 grease.

CAUTION! Do not allow the grease into the area of the circumferential spring.

- Lock without forcing the nuts on the four tie-rods (44) connecting the parts of the pump block. Before locking, check that all parts are touching as required.
- Before putting the springs and shutters of the discharge valves back in, pour a little oil into the stators through the holes in the valves.

CAUTION! Before hooking the recall spring to the anti-suckback command bar, make sure you have put the bar all the way into the sleeve of the rotary feedthrough to avoid bending the tapered part of the bar.

NOTE On DS102 1Ph, DS202 1Ph and DS302 1Ph pumps, fit the joint on the motor shaft after careful removal of grease from the surfaces and application of LOCTITE 242.

	Unscheduled Maintenance	Card No. 102
Pump type:	DS102 1Ph, DS202 1Ph, DS302 1Ph, DS402 1Ph, DS402 3Ph, DS602 1Ph, DS602 3Ph	
Frequency: AS REQUIRED	**Time:** 30 min	**Machine status:** S R
Type of action:	CHANGING OIL (see NOTE)	
Item:	LUBRICANT 9499390	

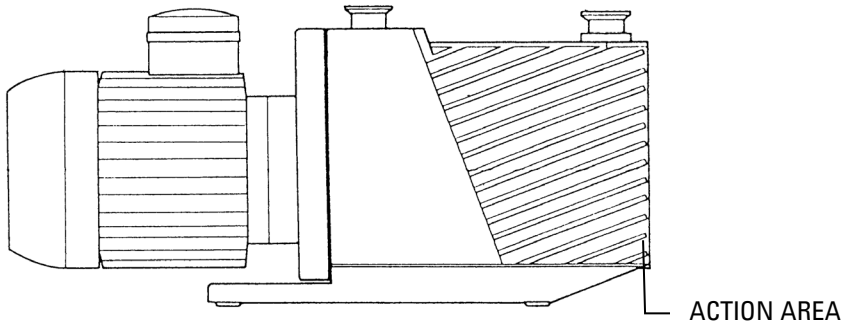

NOTE Normally oil is clear and transparent. If the oil darkens, it should be changed. As best practice, in case of 24/7 operation, we suggest to change the oil every 4500 hr (6 month).

NOTE Replace drain plug gasket each time in order to avoid oil leaks due to damaged gaskets.

Materials required:	Equipment required:
▪ Agilent Rotary Vane Fluid AVF Silver formerly called DS19 Type (1 liter) P/N 9499390. ▪ Drain plug gasket. A kit of three OR gaskets is provided along with the pump.	▪ Fixed wrench for oil exhaust. ▪ Tank to collect oil. ▪ Cotton (or other suitable material) rags for cleaning. ▪ Soap and water solution for cleaning.

WARNING!

Do not change the oil immediately after stopping the machine as the oil temperature may still be high.

WARNING!

Machine safety: disconnect all power lines. Hang the card "MACHINE UNDERGOING MAINTENANCE - DO NOT POWER ON" from the main breaker switch. When finished, remove the safety warning.

WARNING!

If you have to perform maintenance on the pump after a considerable time in operation, leave it to cool as temperature of the outer surface may be in excess of 60 °C.

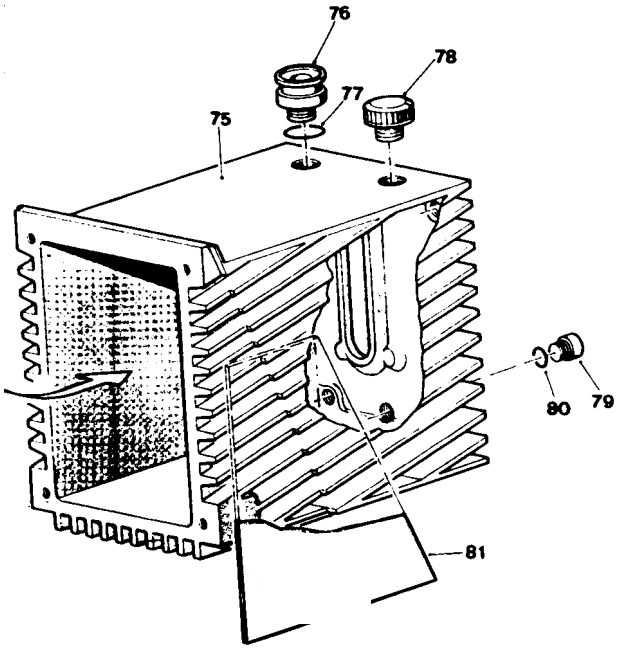

NOTE The oil has to be replaced:

1. when it has become particularly dirty due to the presence of contaminants in the environments being evacuated;

2. when the degree of vacuum achieved by the pump is no longer satisfactory, even after running for one hour with the gas ballast device open.

---

1. Place a tank for the waste oil under the oil drain plug (79).

NOTE You are advised to empty the pump before it cools down completely so that the oil flows out more easily.

NOTE The pump contains up to 1 liter of oil - make sure the tank you use for the waste oil can hold this amount.

---

2. Open the oil drain plug (79) slowly; let the oil flow out by opening the fill plug (78) located at the top of the pump. In the meantime, clean the inside of the drain plug (magnetic plug).
3. After closing the drainage hole with its plug, make the pump perform a number of turns, giving it a brief current pulse, so as to let residual oil in the pump chambers flow out. Then drain off the residual oil again.
4. After all the oil has been drained, close the drain plug tight; take the tank of waste oil away and clean thoroughly, using rags of cotton or other suitable material to dry.
5. Clean thoroughly the pourer lip of the new oil tin; pour the oil slowly into the pump through the filler plug (78).

NOTE Monitor through the sight glass at the front of the pump that you are not exceeding the maximum oil level permitted.

CAUTION! For disposal of waste oil, it is strictly necessary to respect the currently applicable legislation on this matter.

---

6. To achieve a good vacuum level again, run the pump for one hour with the gas ballast open.

	Unscheduled Maintenance	Card No. 103
Pump type:	DS102 1Ph, DS202 1Ph, DS302 1Ph, DS402 1Ph, DS402 3Ph, DS602 1Ph, DS602 3Ph	
Frequency: WHEN DAMAGED	**Time:** 30 min	**Machine status:** S R
Type of action:	DISASSEMBLY	
Item:	SIGHT GLASS	

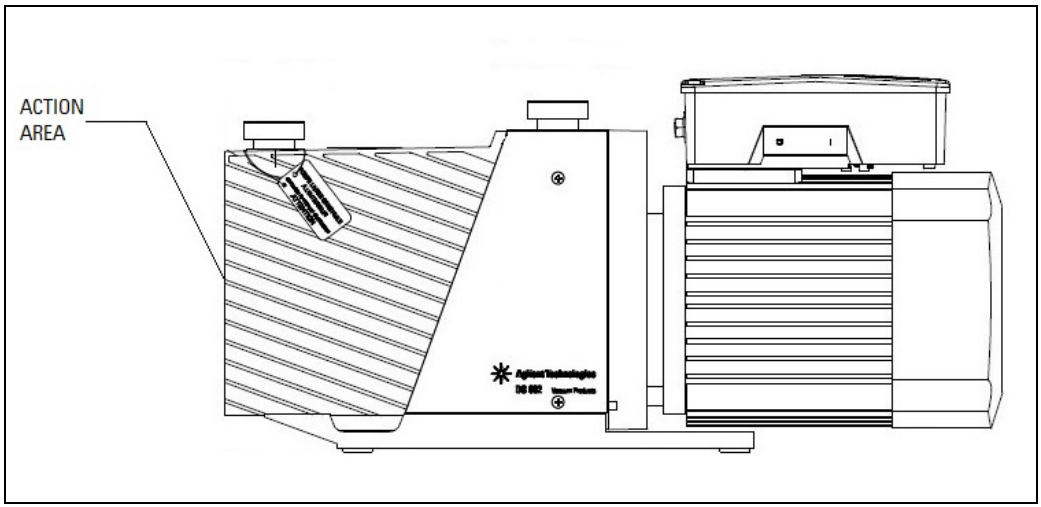

Materials required:	Equipment required:
▪ OR gaskets (for pumps DS102 1Ph, DS202 1Ph and DS302 1Ph Gaskets kit p/n 9499370) (for pumps DS402 1Ph, DS402 3Ph, DS602 1Ph and DS602 3Ph Gaskets kit p/n 9499371) ▪ Sight glass	▪ Mechanical tools

WARNING!

Machine safety: disconnect all power lines. Hang the card "MACHINE UNDERGOING MAINTENANCE - DO NOT POWER ON" from the main breaker switch. When finished, remove the safety warning.

WARNING!

If you have to perform maintenance on the pump after a considerable time in operation, leave it to cool as temperature of the outer surface may be in excess of 60 °C.

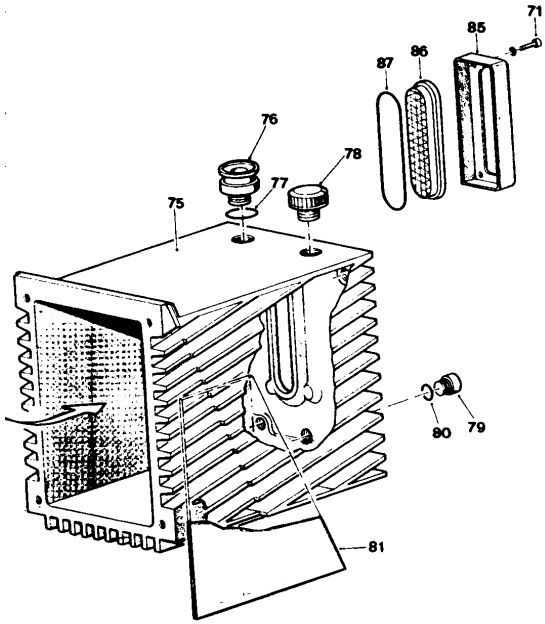

1. Drain off the oil from the pump.

NOTE For a description of how to drain off the oil, see the Unscheduled Maintenance Card No. 102.

2. Unscrew the securing screws (71) and disconnect the flange (85) from the casing.
3. Take out the OR gasket (87) and the sight glass (86).

NOTE When reassembling, replace the gaskets that you have stripped down.

CAUTION! When reassembly is complete, proceed to fill the pump with oil again following the instructions of Unscheduled Maintenance Card No. 102.

	Unscheduled Maintenance	**Card No. 104**
Pump type:	DS102 1Ph, DS202 1Ph, DS302 1Ph, DS402 1Ph, DS402 3Ph, DS602 1Ph, DS602 3Ph	
Frequency: WHEN DAMAGED	**Time:** 30 min	**Machine status:** S R
Type of action:	REPLACEMENT	
Item:	ANTI-SUCKBACK DEVICE SHUTTER	

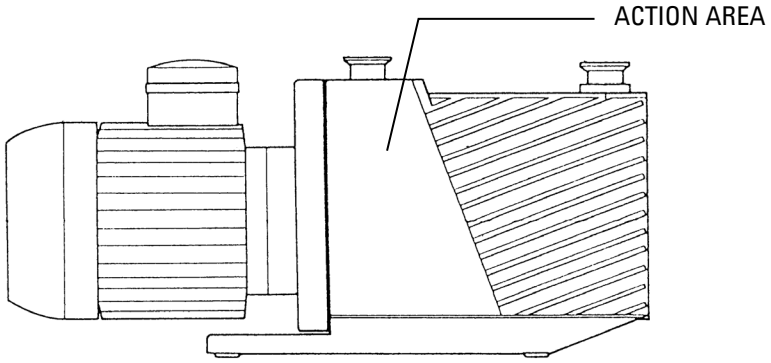

Materials required:	**Equipment required:**
▪ Shutter	▪ Mechanical tools

WARNING!

Machine safety: disconnect all power lines. Hang the card "MACHINE UNDERGOING MAINTENANCE - DO NOT POWER ON" from the main breaker switch. When finished, remove the safety warning.

WARNING!

If you have to perform maintenance on the pump after a considerable time in operation, leave it to cool as temperature of the outer surface may be in excess of 60 °C.

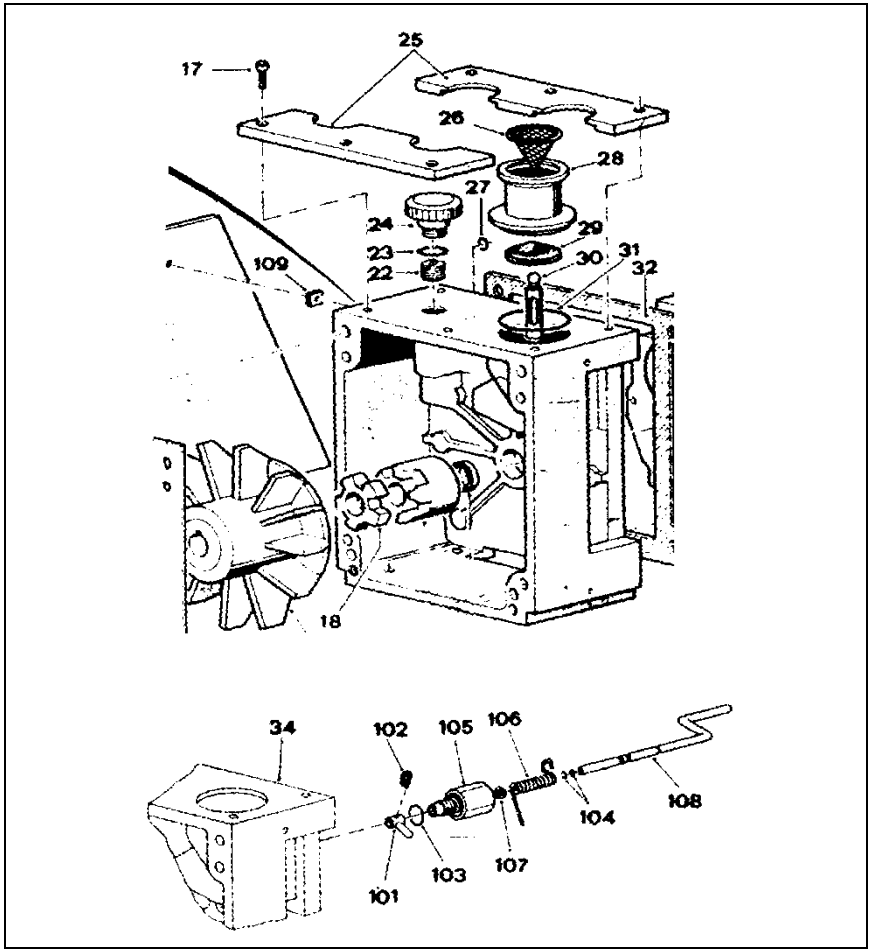

1. Disconnect the flange (28) from the inlet pipe line.
2. Remove the 6 securing screws (17) and remove the two half-plates (25) pressing the suction flange (28) into its seat.
3. Remove the flange (28) and take out the piston (30) with the shutter (29) of the anti-suckback device, disengage it by exerting force on arm (101). Separate the shutter (29) from the piston rod (30) simply by pulling.

CAUTION! Be careful not to scratch the sealing surface of the shutter (29).

4. Reassemble by proceeding in the inverse order.

	Unscheduled Maintenance	Card No. 105
Pump type:	DS102 1Ph, DS202 1Ph, DS302 1Ph, DS402 1Ph, DS402 3Ph, DS602 1Ph, DS602 3Ph	
Frequency: WHEN DAMAGED	**Time:** 30 min	**Machine status:** S R
Type of action:	REPLACEMENT	
Item:	ELECTRIC MOTOR AND JOINT	

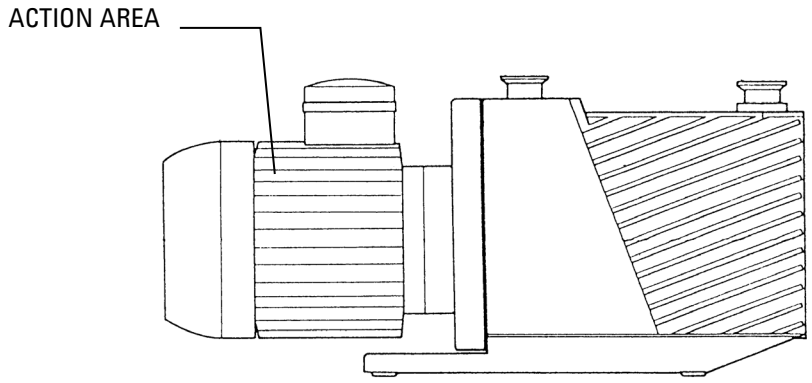

Materials required:	Equipment required:
▪ Electric motor	▪ Mechanical tools

WARNING!

Machine safety: disconnect all power lines. Hang the card "MACHINE UNDERGOING MAINTENANCE - DO NOT POWER ON" from the main breaker switch. When finished, remove the safety warning.

WARNING! **If you have to perform maintenance on the pump after a considerable time in operation, leave it to cool as temperature of the outer surface may be in excess of 60 °C.**

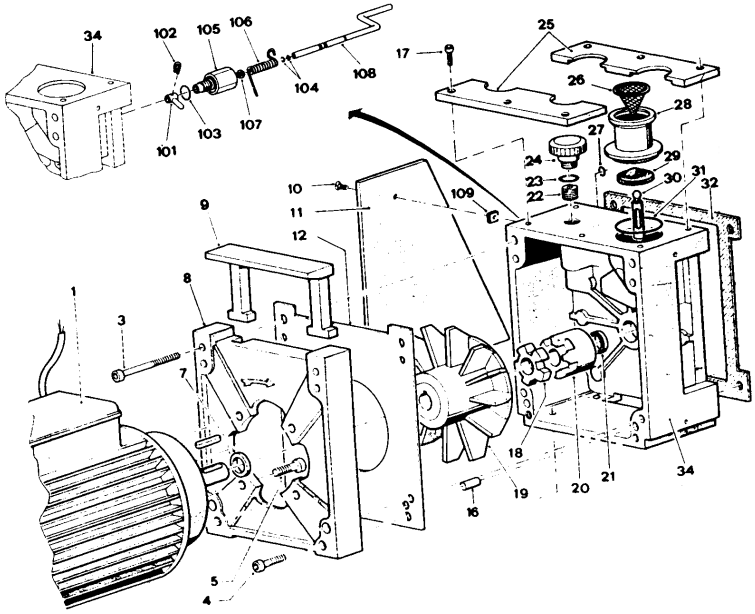

1. Disconnect the motor bearing plate (8) from the support (34) by removing the four screws (4).
2. Remove the half-joint/fan (19) from the support, together with the motor (1), the plate (8) and the plate (12) (for the DS402 1Ph, DS402 3Ph, DS602 1Ph and DS602 3Ph only).

3. Slacken the nut blocking the half-joint (19) to the motor shaft and take it out, using leverage between the plate (8) and the back of the joint.
4. Remove the four screws (5) and separate the plate (8) from the motor (1).
5. Reassemble by proceeding in the inverse order.

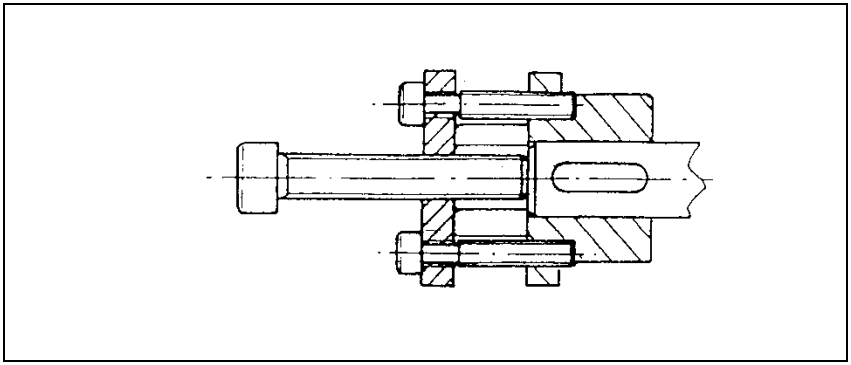

Extractor

	Unscheduled Maintenance	**Card No. 106**
Pump type:	DS102 1Ph, DS202 1Ph, DS302 1Ph, DS402 1Ph, DS402 3Ph, DS602 1Ph, DS602 3Ph	
Frequency: WHEN DAMAGED	**Time:** 1 hour	**Machine status:** S R
Type of action:	DISASSEMBLY	
Item:	DISCHARGE VALVES	

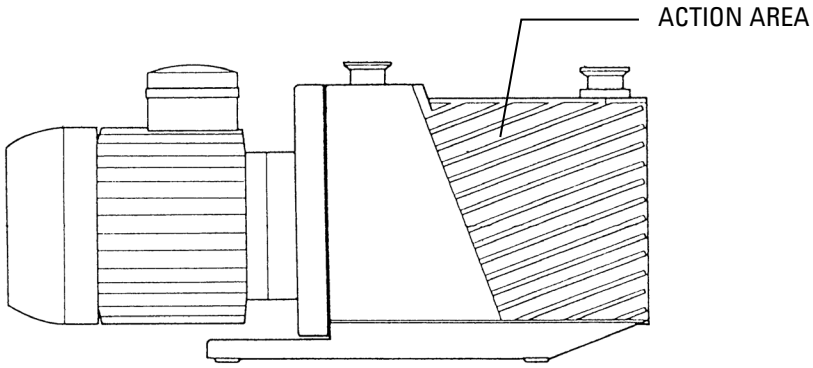

Materials required:	**Equipment required:**
▪ Valves (Gaskets kit)	▪ Mechanical tools

WARNING!

Machine safety: disconnect all power lines. Hang the card "MACHINE UNDERGOING MAINTENANCE - DO NOT POWER ON" from the main breaker switch. When finished, remove the safety warning.

WARNING! **If you have to perform maintenance on the pump after a considerable time in operation, leave it to cool as temperature of the outer surface may be in excess of 60 °C.**

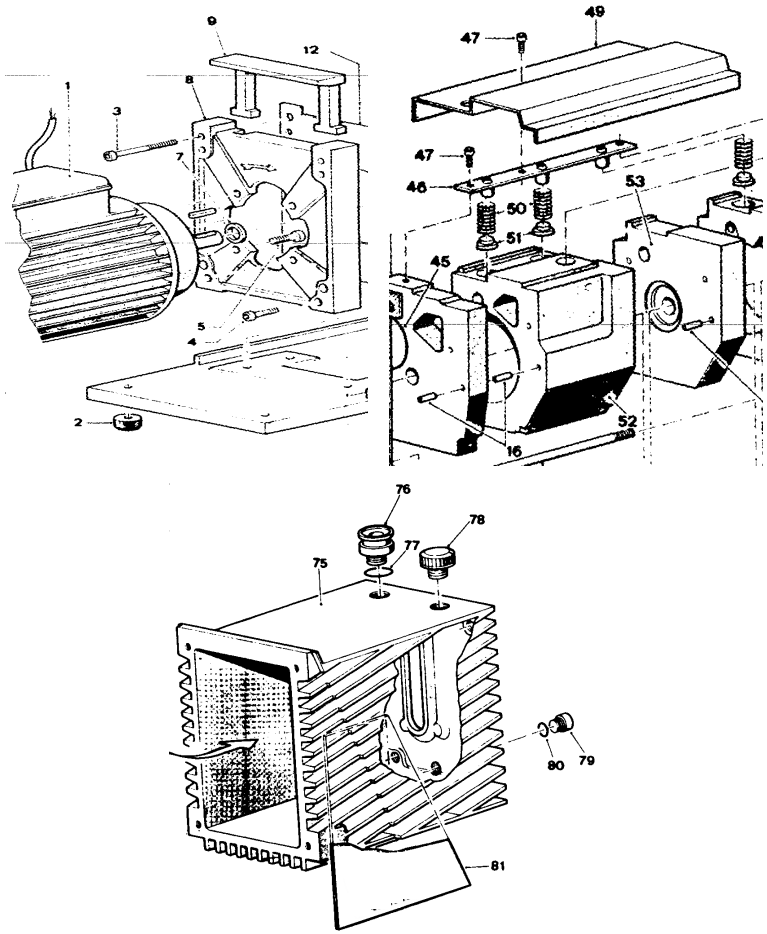

1. Drain off all the oil from the pump.

NOTE For a description of how to drain off the oil, see the Unscheduled Maintenance Card No. 102.

2. Disconnect the discharge flange from its piping.
3. Remove the nuts (3) and remove the pump casing (75).
4. Remove the securing screw (47) holding the splash guard (49) and remove it.
5. Remove the two screws (47) on the valve press-bracket (46) and remove the bracket (46), the springs (50) and the shutters (51).
6. Reassemble by proceeding in the inverse order.

NOTE When reassembling, replace all the gaskets stripped down.

CAUTION! When reassembly is complete, proceed to fill the pump with oil following the instructions of Unscheduled Maintenance Card No. 102.

	Unscheduled Maintenance	Card No. 107
Pump type:	DS102 1Ph, DS202 1Ph, DS302 1Ph, DS402 1Ph, DS402 3Ph, DS602 1Ph, DS602 3Ph	
Frequency: WHEN DAMAGED	**Time:** 1 hour	**Machine status:** S R
Type of action:	DISASSEMBLY	
Item:	OIL CIRCULATION PUMP 9499390	

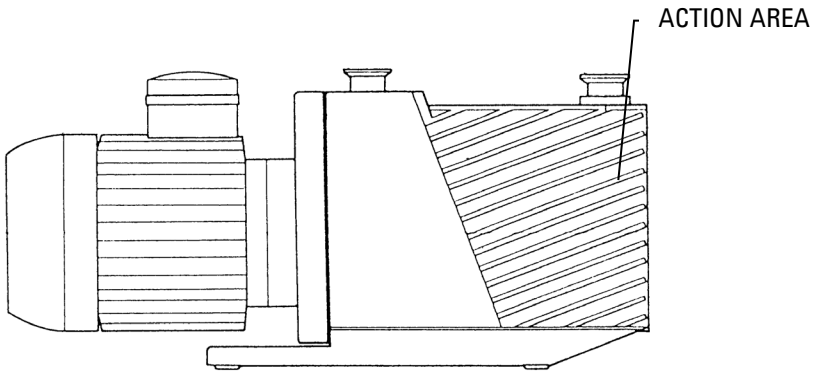

Materials required:	Equipment required:
▪ Oil circulating pump P/N 9499390	▪ Mechanical tools

WARNING!

Machine safety: disconnect all power lines. Hang the card "MACHINE UNDERGOING MAINTENANCE - DO NOT POWER ON" from the main breaker switch. When finished, remove the safety warning.

WARNING!

If you have to perform maintenance on the pump after a considerable time in operation, leave it to cool as temperature of the outer surface may be in excess of 60 °C.

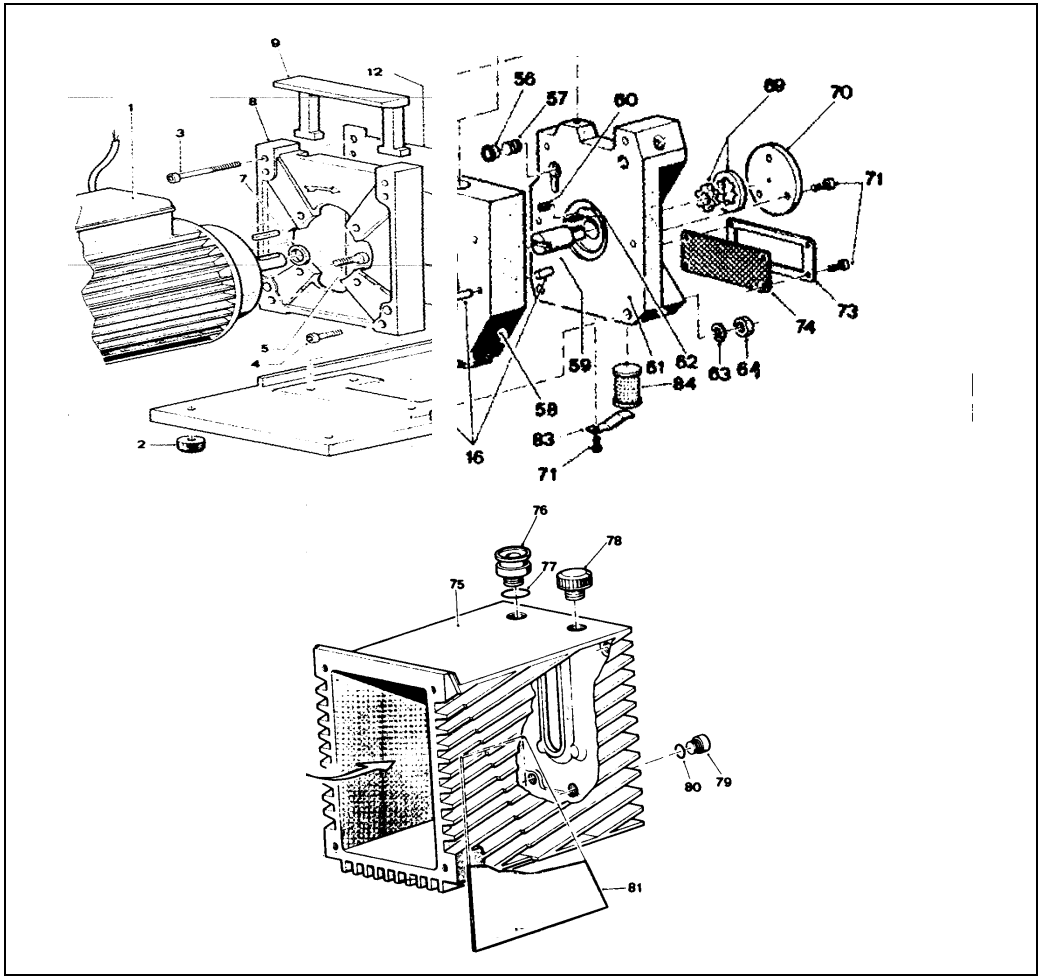

1. Drain off all the oil from the pump.

NOTE For a description of how to drain off the oil, see the Unscheduled Maintenance Card No. 102.

---

2. Disconnect the discharge flange from its piping.
3. Remove the nuts (3) and remove the casing from the pump (75).
4. Remove the three screws (71) connecting the closing plate (70) to the side and take it out.
5. Remove the pump gear-wheels (69).

NOTE A magnet may be used to remove the gear-wheels.

---

6. Reassemble by proceeding in the inverse order.

NOTE When reassembling, replace all the gaskets you have stripped down.

CAUTION! When reassembly is complete, proceed to fill the pump with oil again following the instructions of Unscheduled Maintenance Card No. 102.

	Unscheduled Maintenance	**Card No. 108**
Pump type:	DS102 1Ph, DS202 1Ph, DS302 1Ph, DS402 1Ph, DS402 3Ph, DS602 1Ph, DS602 3Ph	
Frequency: WHEN DAMAGED	**Time:** 1 hour	**Machine status:** S R
Type of action:	DISASSEMBLY	
Item:	ANTI-SUCKBACK DEVICE	

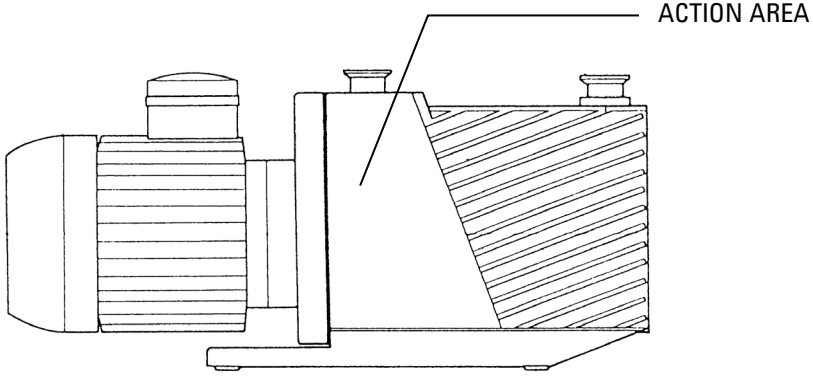

Materials required:	**Equipment required:**
▪ Gasket kit	▪ Mechanical tools

WARNING!

Machine safety: disconnect all power lines. Hang the card "MACHINE UNDERGOING MAINTENANCE - DO NOT POWER ON" from the main breaker switch. When finished, remove the safety warning.

WARNING! **If you have to perform maintenance on the pump after a considerable time in operation, leave it to cool as temperature of the outer surface may be in excess of 60 °C.**

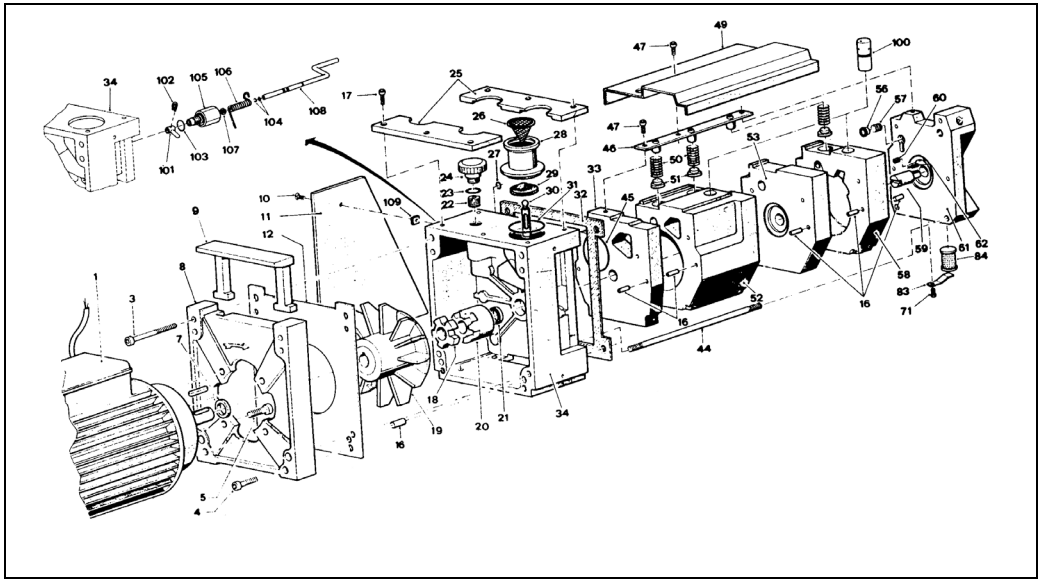

1. Drain off all the oil from the pump.

NOTE For a description of how to drain off the oil, see the Unscheduled Maintenance Card No. 102.

2. Disconnect the discharge flanges from their piping.
3. Remove the locking nuts (3) and remove the casing (75) from the pump.

4. Remove the securing screw (47) and remove the splash guard (49).
5. Remove the shutter from the anti-suckback device.

NOTE For more details on how to remove the anti-suckback device, see Unscheduled Maintenance Card No. 104.

6. Remove the screw (102), take out the arm (101) from the rod.
7. Release the spring (106) from the rod arm (108).
8. Pull the rod (108) out of the rotary feedthrough (105) sleeve.
9. Remove the two OR gaskets (104) from the rod (108) using a screwdriver, if necessary. Be careful not to bend the rod in doing so.
10. Remove the sleeve (105) and remove it from the support (34) together with its OR gasket (103).
11. Remove the hydraulic piston (100) from its seat in the body.
12. Reassemble by proceeding in the inverse order.

NOTE When reassembling, replace all the gaskets stripped down.

CAUTION! When reassembly is complete, proceed to fill the pump with oil again following the instructions of Unscheduled Maintenance Card No. 102.

	Unscheduled Maintenance	Card No. 109
Pump type:	DS102 1Ph, DS202 1Ph, DS302 1Ph, DS402 1Ph, DS402 3Ph, DS602 1Ph, DS602 3Ph	
Frequency: WHEN DAMAGED	**Time:** 1 hour	**Machine status:** S R
Type of action:	DISASSEMBLY	
Item:	PUMP BODY	

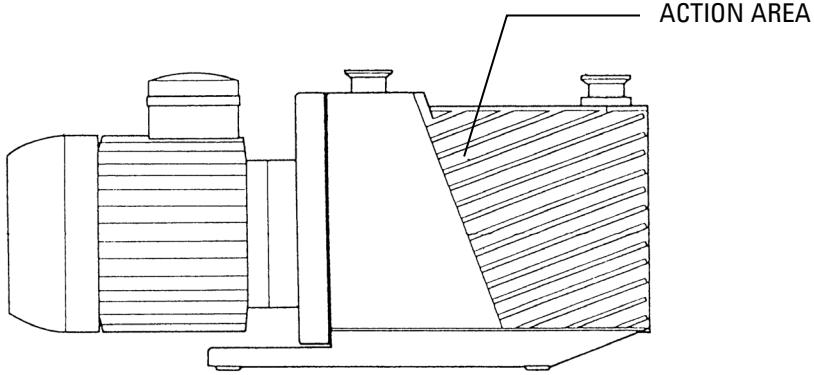

Materials required:	Equipment required:
▪ Gasket kit	▪ Mechanical tools

WARNING!

Machine safety: disconnect all power lines. Hang the card "MACHINE UNDERGOING MAINTENANCE - DO NOT POWER ON" from the main breaker switch. When finished, remove the safety warning.

WARNING! **If you have to perform maintenance on the pump after a considerable time in operation, leave it to cool as temperature of the outer surface may be in excess of 60 °C.**

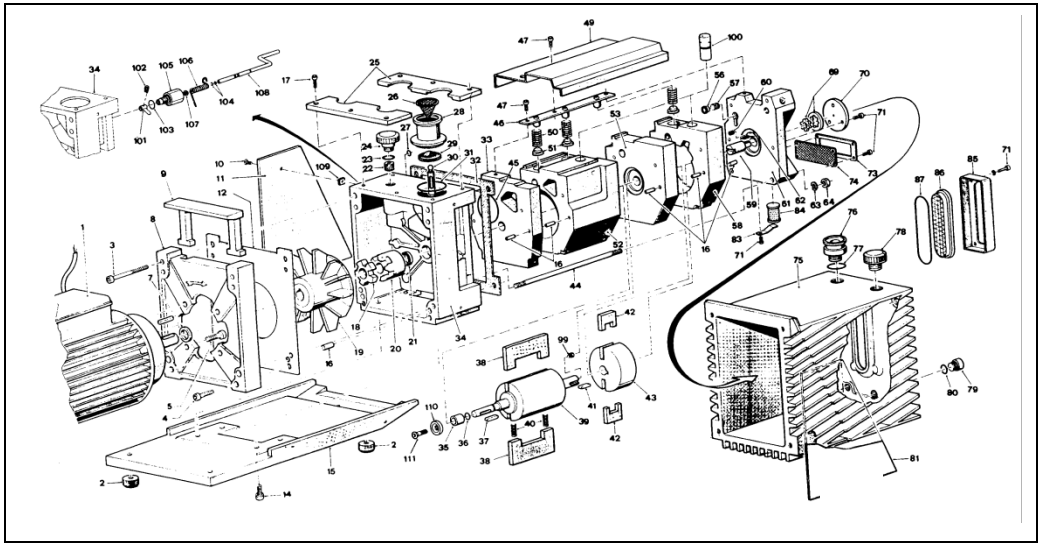

1. Drain off all the oil from the pump.

NOTE For a description of how to drain off the oil, see the Unscheduled Maintenance Card No. 102.

2. Disconnect the discharge flanges from their piping.
3. Disconnect the electric motor (1) complete with half-joint.

NOTE For a description of how to disassemble the electric motor, see the Unscheduled Maintenance Card No. 105.

4. On DS402 1Ph, DS402 3Ph, DS602 1Ph and DS602 3Ph: remove the screw (111) and remove the seal (110)). Slacken the nut locking the half-joint (20) to the shaft of the rotor (39) and take out the half-joint. Remove the tongue (37) with it as well.
5. Unscrew the securing screw (47) and remove the valve screen (49).
6. Slacken the four nuts (64) and take out the tie-rods (44) and the complete functional block (76), lifting it from the pump support (34) and take out the OR gaskets (27) and (45), from the gas ballast line and suction line respectively.

NOTE Be careful not to cut the lip of the oil seal with the sharp edges of the shaft key seat.

7. Remove the screw (102), take out the arm (101) from the rod.

NOTE When reassembling, replace all the gaskets stripped down.

CAUTION! When reassembly is complete, proceed to fill the pump with oil again following the instructions of Unscheduled Maintenance Card No. 102.

	Unscheduled Maintenance	**Card No. 110**
Pump type:	DS102 1Ph, DS202 1Ph, DS302 1Ph, DS402 1Ph, DS402 3Ph, DS602 1Ph, DS602 3Ph	
Frequency: WHEN DAMAGED	**Time:** 1 hour and 15 min.	**Machine status:** S R
Type of action:	REPLACEMENT	
Item:	OIL SHAFT SEAL / ANTI-WEAR BUSHING	

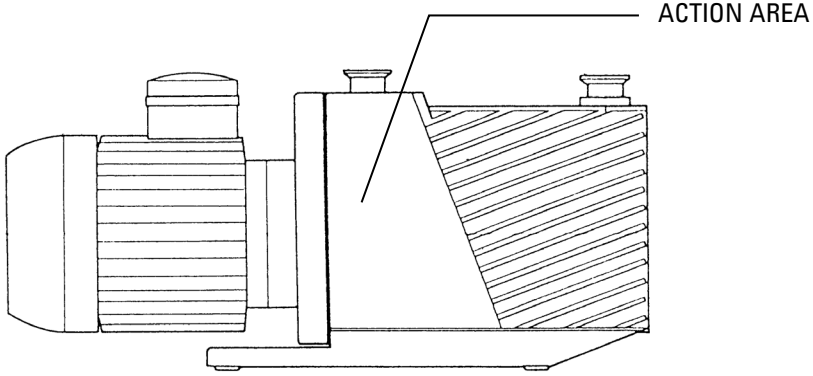

Materials required:	**Equipment required:**
▪ Oil shaft seal ▪ Anti-wear bushing ▪ Gaskets kit	▪ Mechanical tools

WARNING!

Machine safety: disconnect all power lines. Hang the card "MACHINE UNDERGOING MAINTENANCE - DO NOT POWER ON" from the main breaker switch. When finished, remove the safety warning.

WARNING!

If you have to perform maintenance on the pump after a considerable time in operation, leave it to cool as temperature of the outer surface may be in excess of 60 °C.

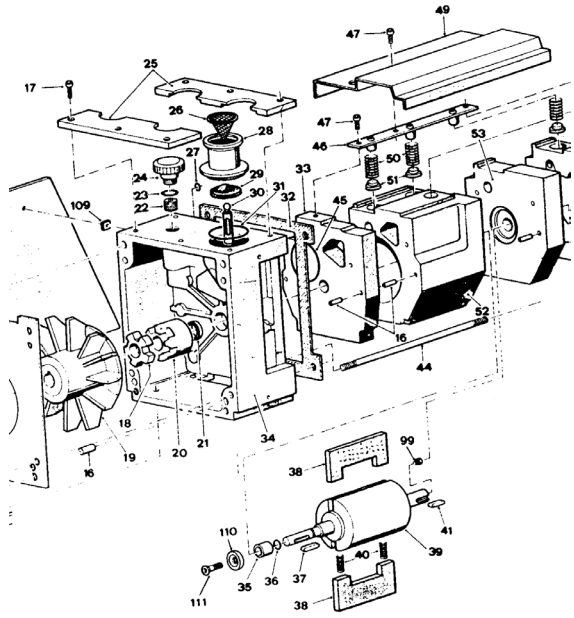

1. Drain off all the oil from the pump.

NOTE For a description of how to drain off the oil, see the Unscheduled Maintenance Card No. 102.

---

2. Remove the worn out oil shaft seal (21) from the pump support (34) using a screwdriver for leverage and taking care not to scratch the seat.

NOTE For a description of how to separate the functional block from the support, see the Unscheduled Maintenance Card No. 109.

---

3. Remove the worn out oil shaft seal (21) from the pump support (34) using a screwdriver for leverage and taking care not to scratch the seat.
4. Take the anti-wear bushing (35) off the shaft and take out the OR Gasket (36).

NOTE For assembly of the new oil shaft seal, a special tool is needed.

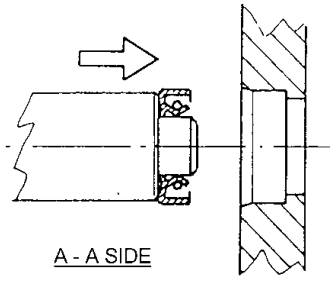

5. After applying silicone grease to the external diameter of the oil seal, engage it on the tool and push it into its seat.
6. Reassemble by proceeding in the inverse order.

NOTE When reassembling, replace all the gaskets stripped down.

CAUTION! When reassembly is complete, proceed to fill the pump with oil again following the instructions of Unscheduled Maintenance Card No. 102.

	Unscheduled Maintenance	**Card No. 111**
Pump type:	DS102 1Ph, DS202 1Ph, DS302 1Ph, DS402 1Ph, DS402 3Ph, DS602 1Ph, DS602 3Ph	
Frequency: WHEN DAMAGED	**Time:** 2 hours	**Machine status:** S R
Type of action:	DISASSEMBLY	
Item:	FUNCTIONAL BLOCK ROTORS	

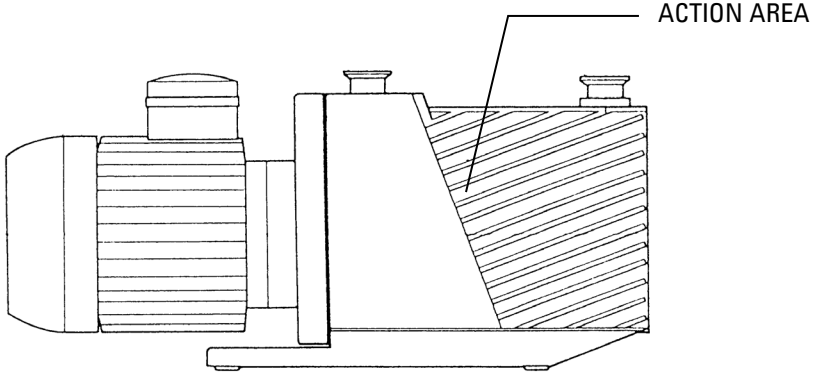

Materials required:	**Equipment required:**
▪ Oil shaft seal ring ▪ Anti-wear bushing ▪ OR gaskets ▪ 1st stage vanes ▪ 2nd stage vanes ▪ Gas Ballast shutter (the above items of material are included in the Major Maintenance kit)	▪ Mechanical tools

WARNING!

Machine safety: disconnect all power lines. Hang the card "MACHINE UNDERGOING MAINTENANCE - DO NOT POWER ON" from the main breaker switch. When finished, remove the safety warning.

WARNING!

If you have to perform maintenance on the pump after a considerable time in operation, leave it to cool as temperature of the outer surface may be in excess of 60 °C.

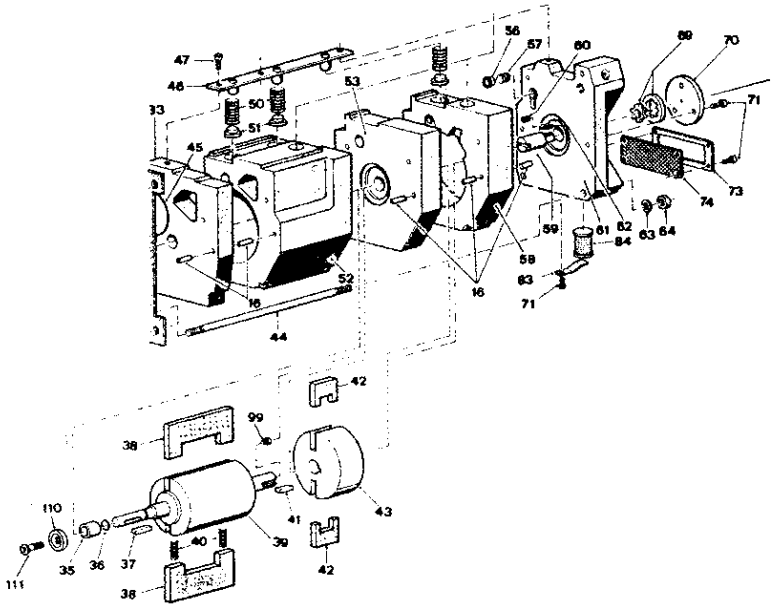

1. Drain off all the oil from the pump.

NOTE For a description of how to drain off the oil, see the Unscheduled Maintenance Card No. 102.

2. Detach the entire functional block from the pump support.

NOTE For a description of how to separate the functional block from the support, see the Unscheduled Maintenance Card No. 109.

3. Disassemble the discharge valves.

NOTE For a description of how to disassemble the discharge valves, see the Unscheduled Maintenance Card No. 106.

4. Detach the end plate (61) from the rest of the pump body, exerting leverage if necessary on the reference notches between the parts. This will give you access to the retaining valve (56) and associated spring (57) at the gas ballast inlet.
5. Disconnect the 2nd stage stator (58), remove the two vanes (42), take the 2nd stage rotor (43) off the shaft and take out the key (41).
6. Remove the partition wall (53) from between the 1st and 2nd stages.
7. Detach the 1st stage stator (52) from the inner side (33), pressing back on the springs (40) of the vanes (38) to avoid the vanes from touching against the sharp corners of the body and becoming damaged.
8. Take out the 1st stage rotor (39), the vanes (38) and the springs (40).
9. Reassemble by proceeding in the inverse order.

NOTE When reassembling, replace all the gaskets stripped down.

CAUTION! After reassembly is complete, proceed to fill the pump again with oil following the instructions of Unscheduled Maintenance Card No. 102.

Troubleshooting and Corrective Action

NOTE

If the pump breaks down or does not work well, first check thoroughly that all the standards rules listed in the sections relevant installation and operation are currently observed.
If you cannot get sufficiently low pressure, the problem may lie with the system connected to the pump, i.e. the vacuum chamber and inlet line.
Even when the design sizes are correct, the problems listed below are still fairly frequent:

a) faulty seals: check that the seals are fitted, are in good working orderand are clean; check all joints, taps, sight glasses, weld joints, etc.

b) unsuitable materials: avoid the use of rubber, plastic or even metal parts that are porous or permeable.

c) volatile substances: as far as possible, eliminate humidity, grease, dirt, rust, solvents (even small traces).

Tab. 12

	SYMPTOM	PROBABLE CAUSE	SUGGESTED REMEDY	CARD REF.
1	The pump does not start (or stops immediately).	A) The motor-pump coupling is defective.	Check state of the elastic joint and replace the parts as needed.	105
		B) Viscosity of the oil has increased.	Examine the oil and change if necessary (find out why it has deteriorated).	102
		C) Excessive friction inside pump.	Test the resistance to rotation, by turning the joint by hand. If the rotors are blocked, disassemble the pump body and check state of the parts inside.	111

	SYMPTOM	PROBABLE CAUSE	SUGGESTED REMEDY	CARD REF.
		D) Electrical protections not set.	Adjust the protections.	
		E) Oil too viscous because of low room temperature.	Heat the oil up to a temperature of 20 °C or use an oil recommended for low temperatures.	102
		F) Direction of rotation inverted (only 3-phase motors).	Change over two phase wires of the electric power supply.	
2	The pump stops (stalls).	A) Seizure of some internal parts.	Proceed as at 1-C.	
		B) Oil very dirty.	Proceed as at 1-B.	
3	The pump overheats.	A) Too much friction inside.	Proceed as at 1-C.	
		B) Oil ducts clogged inside.	Try changing the oil, otherwise disassemble the pump and clean it well.	102 111
4	Too much oil drained off by the exhaust.	A) Gas Ballast device broken (always open).	Check the device to ensure the gas ballast is properly adjusted.	111
		B) Heavy duty work (high suction pressures or very frequent cycles).	Check condition of the oil trap filter.	
		C) Leak in system.	Check the system (see “Note”).	
5	The pump is loosing oil.	A) Seal on shaft defective.	Replace the oil seal and the anti-wear bushing.	110
		B) Other gaskets defective.	Identify the areas where seeping occurs and check the associated gaskets.	Refer to the card related to involved item
		C) Oil level window broken	Replace the oil level window.	

	SYMPTOM	PROBABLE CAUSE	SUGGESTED REMEDY	CARD REF.
6	The pump is very noisy even at steady operating conditions.	A) Exhaust valves damaged.	Inspect the valves.	106
		B) High suction pressure, or gas ballast device is open.	Check the system and the gas ballast valve (see items 4-A and 4-B).	
		C) Elastic star of joint is damaged.	Check and replace if necessary.	
		D) A screw of the joint has become loose.	Lock the screw after application of Loctite 222 (for slack threads).	
7	When the pump is stopped, the inlet pressure rises rapidly.	A) The anti-suckback device is defective.	Disassemble and check the anti-suckback device.	108
		B) The cause of the problem is not with the pump.	See “Note”.	
8	The pump does not produce a sufficient vacuum.	A) Not enough oil, or oil contaminated.	Check level and appearance of the oil. Open the Gas Ballast for half an hour at least; change the oil whenever necessary.	01 102
		B) Oil ducts clogged inside.	Proceed as at 3-B.	
		C) Direction of rotation inverted.	Proceed as at 3-C.	
		D) OR gaskets communicating with the inlet line defective.	Replace the gaskets.	109
		E) Exhaust valves damaged or out of place.	Proceed as at 6-A.	

SYMPTOM	PROBABLE CAUSE	SUGGESTED REMEDY	CARD REF.
	F) Insufficient oil pressure in the lubricating circuit, preventing the anti-suckback device from opening.	Inspect the gears of the oil pump and check that it is working.	107
	G) Internal moving parts worn.	Disassemble the pump, and replace any worn parts.	111
	H) Pump working with gas ballast device open.	Close the gas ballast device.	
	I) Anti-suckback valve fails to open.	Disassemble the suction flange and check the device.	104 108
	J) Parts of the functional block not in perfect contact because of deposits of dirt or failure to put a plug on the service holes.	Disassemble and check condition of the part surfaces and that plugs have been used.	111
	K) The cause of the problem is not with the pump.	See “Note”.	

Replacement Parts and Accessories

Tab. 13

OTHER SPARE PARTS	Q.TY					P/N
	DS102 1Ph	DS202 1Ph	DS302 1Ph	DS402 1Ph DS402 3Ph	DS602 1Ph DS602 3Ph	
MINOR MAINTENANCE KIT (*)	X	X	X			9499370
MINOR MAINTENANCE KIT (*)				X	X	9499371
MAJOR MAINTENANCE KIT (**)	X					9499380
MAJOR MAINTENANCE KIT (**)		X	X			9499381
MAJOR MAINTENANCE KIT (**)				X	X	9499382
COUPLING KIT (***)	X	X	X			9499370M002
COUPLING KIT (***)				X	X	9499371M002

(*) Contains all the valves, O-rings and seals to refurbish the pump to vacuum integrity.

(**) Includes all the items of the minor maintenance kit plus the vanes.

(***)Includes items 18, 19 and 20 shown in the exploded view of page 146.

Tab. 14

ACCESSORY ITEM ON EXHAUST	Q.TY					P/N
	DS102 1Ph	DS202 1Ph	DS302 1Ph	DS402 1Ph DS402 3Ph	DS602 1Ph DS602 3Ph	
OIL MIST ELIMINATOR KF25	X	X	X	X	X	9499395
OIL MIST CARTRIDGE (Q.ty 2)	X	X	X	X	X	9499394

Tab. 15

RECOMMENDED OIL	P/N	Q.TY
Agilent Rotary Vane Fluid AVF Silver formerly called DS19 Type (Europe)	9499390	1 liter
Agilent Rotary Vane Fluid AVF Silver formerly called DS19 Type (USA)	K7516301	1 liter
Agilent Rotary Vane Fluid AVF Silver formerly called DS19 Type (USA)	K7516302	1 gallon

Agilent Technologies

Vacuum Products Division

Dear Customer,

Thank you for purchasing an Agilent vacuum product. At Agilent Vacuum Products Division we make every effort to ensure that you will be satisfied with the product and/or service you have purchased.

As part of our Continuous Improvement effort, we ask that you report to us any problem you may have had with the purchase or operation of our products. On the back side you find a Corrective Action request form that you may fill out in the first part and return to us.

This form is intended to supplement normal lines of communications and to resolve problems that existing systems are not addressing in an adequate or timely manner.

Upon receipt of your Corrective Action Request we will determine the Root Cause of the problem and take the necessary actions to eliminate it. You will be contacted by one of our employees who will review the problem with you and update you, with the second part of the same form, on our actions.

Your business is very important to us. Please, take the time and let us know how we can improve.

Sincerely.

Giampaolo LEVI

Vice President and General Manager
Agilent Vacuum Products Division

Note: Fax or mail the Customer Request for Action (see backside page) to Agilent Vacuum Products Division (Torino) – Quality Assurance or to your nearest Agilent representative for onward transmission to the same address.

CUSTOMER REQUEST FOR CORRECTIVE / PREVENTIVE / IMPROVEMENT ACTION

TO: AGILENT VACUUM PRODUCTS DIVISION TORINO – QUALITY ASSURANCE FAX

N°: XXXX-011-9979350

ADDRESS: AGILENT TECHNOLOGIES ITALIA S.p.A. – Vacuum Products Division –

Via F.lli Varian, 54 – 10040 Leinì (TO) – Italy

E-MAIL: vpd-qualityassurance_pdl-ext@agilent.com

NAME	COMPANY	FUNCTION
ADDRESS: TEL. N° : FAX N° : E-MAIL:		
PROBLEM / SUGGESTION : REFERENCE INFORMATION (model n°, serial n°, ordering information, time to failure after installation, etc.): DATE		
CORRECTIVE ACTION PLAN / ACTUATION (by AGILENT VPD)	LOG N°	

XXX = Code for dialing Italy from your country (es. 01139 from USA; 00139 from Japan, etc.)

Agilent Technologies

Agilent Technologies

Vacuum Products Division
Instructions for returning products

Dear Customer,

Please follow these instructions whenever one of our products needs to be returned.

Complete the attached **Request for Return form** and send it to Agilent Technologies (see below), taking particular care to include the completed **Health and Safety** declaration Section. No work can be started on your unit until we receive a completed copy of this form.
After evaluating the information, Agilent Technologies will provide you with a **Return Authorization (RA) number** via email or fax, as requested. Note: Depending on the type of return, a Purchase Order may be required at the time **the Request for Return is submitted**. We will quote any necessary services (evaluation, repair, special cleaning, eg).

Product preparation

- Remove all accessories from the core product (e.g. inlet screens, vent valves).
- Prior to shipment and if applicable for your product, drain any oils or other liquids, purge or flush all gasses, and wipe off any excess residue.
- If ordering an Advance Exchange product, please use the packaging from the Advance Exchange to return the defective product.
- Seal the product in a plastic bag, and package product carefully to avoid damage in transit. You are responsible for loss or damage in transit.
- Include a copy of the Health and Safety Declaration in the shipping documentation on the outside of the shipping box of your returning product.
- Clearly label package with RA number. Using the shipping label provided will ensure the proper address and RA number are on the package. Packages shipped to Agilent without a RA clearly written on the outside cannot be accepted and will be returned.
- Return only products for which the RA was issued.

Shipping

- Ship to the location specified on the printable label, which will be sent, along with the RA number, as soon as we have received all of the required information. Customer is responsible for freight charges on returning product.
- Return shipments must comply with all applicable Shipping Regulations (IATA, DOT, ADR, etc.) and carrier requirements.

RETURN THE COMPLETED **REQUEST FOR RETURN** FORM TO YOUR NEAREST LOCATION:

EUROPE:	**NORTH AMERICA:**	**PACIFIC RIM:**
Fax: 00 39 011 9979 330	Fax: 1 781 860 9252	please visit our website for individual office information
Fax Free: 00 800 345 345 00	Toll Free: 800 882 7426	http://www.agilent.com
Toll Free: 00 800 234 234 00	vpl-ra@agilent.com	
vpt-customercare@agilent.com		

TERMS AND CONDITIONS

Please read the terms and conditions below as they apply to all returns and are in addition to the Agilent Technologies Vacuum Product Division – Products and Services Terms of Sale.

- Unless otherwise pre-negotiated, customer is responsible for the freight charges for the returning product. Return shipments must comply with all applicable Shipping Regulations (IATA, DOT, etc.) and carrier requirements.
- Agilent Technologies is not responsible for returning customer provided packaging or containers.
- Customers receiving an Advance Exchange product agree to return the defective, rebuildable part to Agilent Technologies within 15 business days. Failure to do so, or returning a non-rebuildable part (crashed), will result in an invoice for the non-returned/non-rebuildable part.
- Returns for credit toward the purchase of new or refurbished Products are subject to prior Agilent approval and may incur a restocking fee. Please reference the original purchase order number.
- Units returned for evaluation will be evaluated, and a quote for repair will be issued. If you choose to have the unit repaired, the cost of the evaluation will be deducted from the final repair pricing. A Purchase Order for the final repair price should be issued within 3 weeks of quotation date. Units without a Purchase Order for repair will be returned to the customer, and the evaluation fee will be invoiced.
- Products returned that have not been drained from oil will be disposed.
- A Special Cleaning fee will apply to all exposed products
- If requesting a calibration service, units must be functionally capable of being calibrated.

Agilent Technologies

Vacuum Products Division
Request for Return Form

Customer information		
Company :	Contact Name:	
Address:	Tel:	Fax:
	Email:	

Equipment			
Product description	Agilent PartNo	Agilent Serial No	Original Purchasing Reference
Failure description		Type of process (for which the equipment was used)	

Type of return

☐ Non Billable ☐ Billable ➡ New PO # (hard copy must be submitted with this form): _____

☐ Exchange ☐ Repair ☐ Upgrade ☐ Consignment/Demo ☐ Calibration ☐ Evaluation ☐ Return for Credit

Health and safety

The product has been exposed to the following substances:
(by selecting 'YES' you MUST complete the table to the right)

Substances (please refer to MSDS forms)

* Agilent will not accept delivery of any product that is exposed to radioactive, biological, explosive substances or dioxins, PCB's without written evidence of decontamination.

		Trade name	Chemical name	Chemical Symbol	CAS Number
Toxic	☐ YES ☐ NO				
Harmful	☐ YES ☐ NO				
Corrosive	☐ YES ☐ NO				
Reactive	☐ YES ☐ NO				
Flammable	☐ YES ☐ NO				
Explosive (*)	☐ YES ☐ NO				
Radioactive (*)	☐ YES ☐ NO				
Biological (*)	☐ YES ☐ NO				
Oxidizing	☐ YES ☐ NO				
Sensitizer	☐ YES ☐ NO				
Other dangerous substances	☐ YES ☐ NO				

Goods preparation

If you have replied YES to one of the above questions. Has the product been purged? ☐ YES ☐ NO
If yes, which cleaning agent/method:

Has the product been drained from oil? ☐ YES ☐ NOT APPLICABLE
I confirm to place this declaration on the outside of the shipping box. ☐

I declare that the above information is true and complete to the best of my knowledge and belief.
I understand and agree to the terms and conditions on page 2 of this document.

Name:	Authorized Signature:
Position:	
Date:	

NOTE: If a product is received at Agilent which is contaminated with a toxic or hazardous material that was not disclosed, **the customer will be held responsible** for all costs incurred to ensure the safe handling of the product, and is liable for any harm or injury to Agilent employees as well as to any third party occurring as a result of exposure to toxic or hazardous materials present in the product.

Agilent Vacuum Products Division/Sales and Service Offices

United States
Agilent Technologies
121 Hartwell Avenue
Lexington, MA 02421 - USA
Ph. +1 781 861 7200
Fax: +1 781 860 5437
Toll-Free: +1 800 882 7426
vpl-customercare@agilent.com

Netherlands
Agilent Technologies Netherlands B.V.
Customer Contact Center
Laan van Langerhuize 1, toren A-8
1186 DS Amstelveen
Tel. +31 020 547 2600
Fax +31 020 654 5748
customercare_netherlands@agilent.com

Belgium
Agilent Technologies Belgium S.A./N.V.
Customer Contact Center
Pegasus Park
De Kleetlaan 12A bus 12
B-1831 Diegem
Tel. +32 2 404 92 22
Fax +32 2 626 46 30
customercare_belgium@agilent.com

Brazil
Agilent Technologies Brasil
Avenida Marcos Penteado de Ulhoa
Rodrigues, 939 - 6° andar
Castelo Branco Office Park
Torre Jacarandá - Tamboré
Barueri, Sao Paulo CEP: 06460-040
Toll free: 0800 728 1405

China
Agilent Technologies (China) Co. Ltd
No.3, Wang Jing Bei Lu, Chao Yang District
Beijing, 100102, China
Tel: +86 (0)10 64397888
Fax: +86 (0)10 64392765
Toll free: 400 8206778 (mobile)
Toll free: 800 8206778 (landline)
vacuum.cnmarketing@agilent.com
vpc-customerservice@agilent.com

France
Agilent Technologies
Parc Technopolis - Z.A. de Courtaboeuf
3, avenue du Canada - CS 90263
91978 Les Ulis cedex, France
Tel: +33 (0) 1 64 53 61 15
Fax: +33 (0) 1 64 53 50 01
vpf.sales@agilent.com

Southeast Asia
Agilent Technologies Sales Sdn Bhd
Unit 201, Level 2 uptown 2,
2 Jalan SS21/37, Damansara Uptown
47400 Petaling Jaya, Selangor, Malaysia
Ph. +603 7712 6181
Fax: +603 7727 1239
Toll free: 1 800 880 805
vps-customerservice@agilent.com

India (Sales)
Agilent Technologies India Pvt. Ltd.
Unit Nos 110- 116, & Part of 101 & 109
First Floor, Splendor Forum,
Plot No.-3 , District Centre, Jasola
New Delhi-110025
Ph. +91 11 4623 7100
Fax: +91 4623 7105
Toll Free: 1 800 180 1517

Italy
Agilent Technologies Italia S.p.A.
Via F.lli Varian, 54
10040 Leini, (Torino) - Italy
Tel: +39 011 9979 111
Fax: +39 011 9979 350
Toll free: 00 800 234 234 00
vpt-customerservice@agilent.com

Japan
Agilent Technologies Japan, Ltd.
9-1 Takakura-cho Hachioji-city,
Tokyo, Japan
Tel.: +81- 3-5232-1253
Fax: +81-120-565-154
Toll-Free: +81-120-477-111
jp-vvt-sales.pdl-ext@agilent.com

Singapore
Agilent Technologies Singapore Pte. Ltd,
1 Yishun Avenue 7,
Singapore 768923
Tel : (65) 6215 8045
Fax : (65) 6754 0574
Toll free: 1 800 2762622
vps-customerservice@agilent.com

Korea
Agilent Technologies Korea, Ltd.
Ilshin Builiding 4F
Yongsan-gu Hannam-daero
Seoul Korea 04418
Tel: +82 (0)2 2194 9449
Fax: +82 (0)2 2194 9853
Toll free: 080 222 2452
vpk-customerservice@agilent.com

UK and Ireland
Agilent Technologies LDA UK Limited
Lakeside Cheadle Royal Business Park
Cheadle, Cheshire SK8 3GR,
United Kingdom
Ph. +44 01865291570
Fax +44 01865291571
Toll free: 00 800 234 234 00
Toll free fax: 00 800 345 345 00
vpt-customercare@agilent.com

© Agilent Technologies, Inc. 2018
11/2018

Agilent Technologies

India (Service)
Agilent Technologies India Pvt. Ltd.
C-Block, RMZ Centennial Plot Number- 8A, 8B, 8C, 8D,
Doddanakundi Industrial Area, ITPL Road,
Mahadevapura Post, Bangalore- 560048
Ph. +91 80 40614000
Fax: +91 80 40148991

Taiwan
Agilent Technologies Taiwan Limited
No. 20 Gao-shuang Road, Ping-zhen Dist
Tao-Yuan City
32450 Taiwan, R.O.C.
Tel: +886 3 4959004
Toll free: 0800 018 768
vpw-customerservice@agilent.com

Germany and Austria
Agilent Technologies
Sales & Services GmbH & Co. KG
Lyoner Str. 20
60 528 Frankfurt am Main
GERMANY
Tel: +49 69 6773 43 2230
Fax: +49 69 6773 43 2250

Mexico
Agilent Technologies
Concepcion Beistegui No 109
Col Del Valle
C.P. 03100 – Mexico, D.F.
Tel.: +52 5 523 9465
Fax: +52 5 523 9472

Other Countries
Agilent Technologies Italia S.p.A.
Via F.lli Varian, 54
10040 Leini, (Torino) - Italy
Tel.: +39 011 997 9111
Fax: +39 011 997 9350
Toll-Free: 00 800 234 234 00
vpt-customercare@agilent.com

Customer Support & Service
NORTH AMERICA:
Toll Free: 800 882 7426
vpl-ra@agilent.com
Lexington-service@agilent.com

EUROPE:
Toll Free: 00 800 234 234 00
vpt-customercare@agilent.com

PACIFIC RIM:
please visit our website for individual office information
http://www.agilent.com/chem/vacuum

Worldwide Web Site, Catalog and Order On-line:
www.agilent.com/chem/vacuum
Representatives in most countries